REV	DATE	CHANGE DESCRIPTION	MOD.BY	CK1	CK2
F	12/03/2003	CHANGED FLYWHEEL PLATE P/N	ZS	HM	RJH

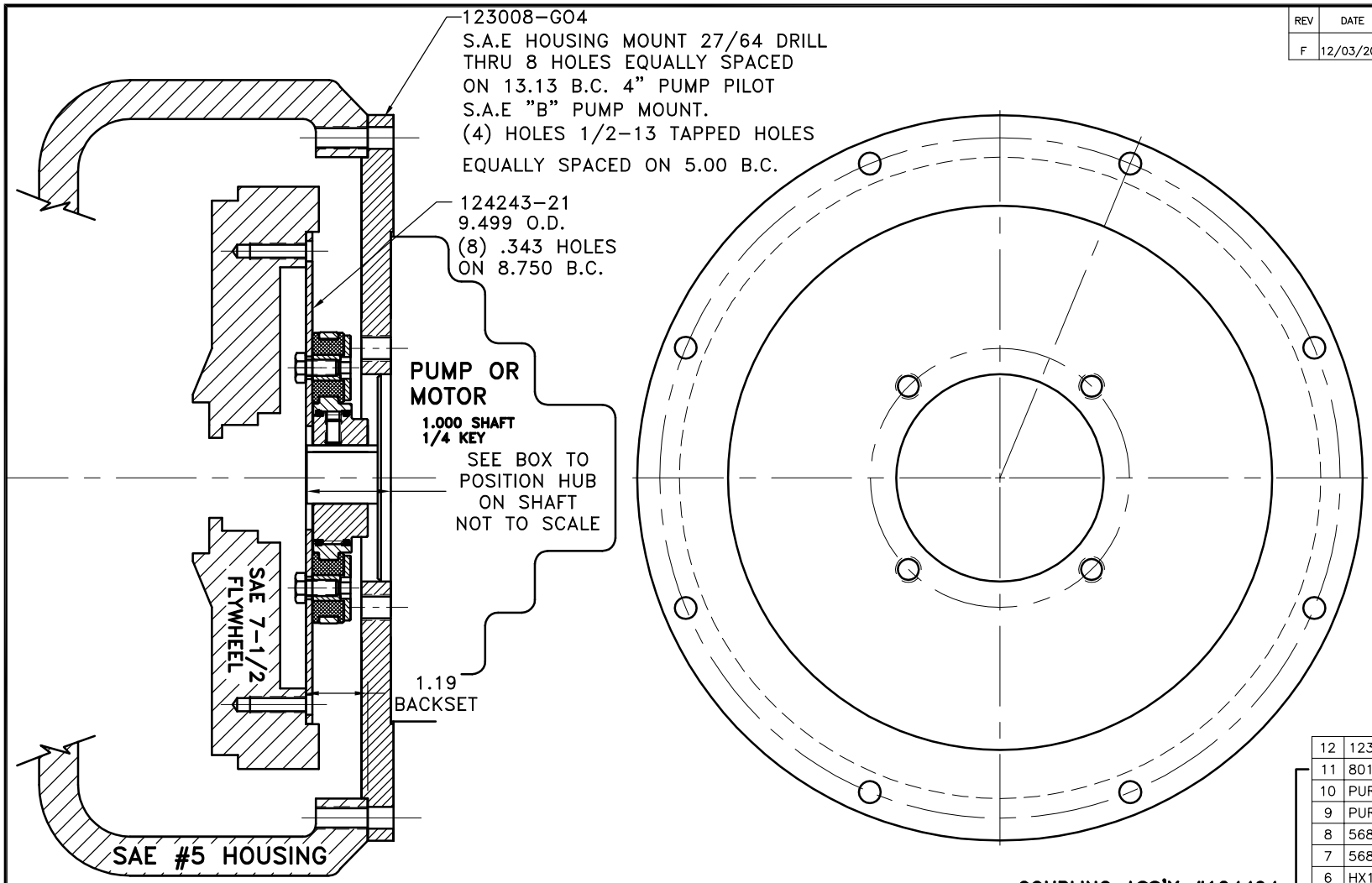

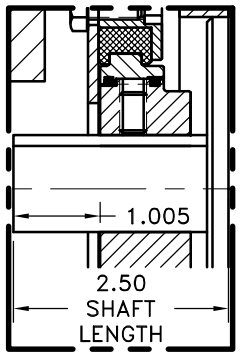

COUPLING ASS'Y #124404

12	123008-G04	PUMP MOUNT PLATE [5]	1
11	801912	GREASE	1
10	PURCHASE	5/16-18 x 3/4" SSSCP	1
9	PURCHASE	5/16-18 x 5/8" SSSCP	1
8	568-143	O-RING (124282-02)	1
7	568-142	O-RING (124838-11)	1
6	HX100	5/16-24 x 5/8" HHB	6
5	123729-01	THREADED BUSHING	6
4	H52500	NEOPRENE INSERT	6
3	124838-11	EXTERNAL SPLINED HUB	1
2	124282-02	INT. SPL. HUB [40 16/32\4.250]	1
1	124243-21	FLYWHEEL PLATE [7.5\4.250]	1

NOTE: REMOVE HUB FROM ASS'Y, PRESET HUB ON SHAFT & RE- ASSEMBLE USING NUT & BOLT GRADE LOC-TITE ON SET SCREWS

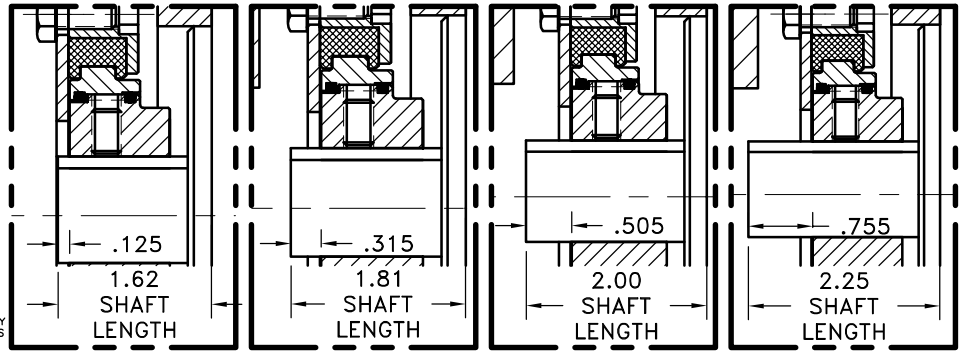

SYMBOLS
FLATNESS
STRAIGHTNESS
ANGULARITY
SQUARENESS
PARALLELISM
CONCENTRICITY
TRUE POSITION
ROUNDNESS
CIRCULAR RUN OUT
TOTAL RUN OUT
CYLINDRICITY
FINISH

DET.	PART NUMBER	DESCRIPTION	QTY.

DO NOT SCALE DRAWING
TOLERANCES UNLESS OTHERWISE SPECIFIED
125 MAXIMUM
ANGLE ±1/2°
FRACTION ±1/32
DECIMAL
.00 ±.01
.000 ±.005
.0000 ±.0005

HAYES MANUFACTURING INC. ®

TITLE
FLYWHEEL COUPLING ASS'Y W/ PUMP MOUNT PLATE

MATERIAL

- UNLESS OTHERWISE SPECIFIED -
REMOVE FIRST THREAD ON ALL TAPPED HOLES
BREAK ALL SHARP CORNERS .010 TO .020
STAMP OR MARK DRAWING NO.

DRAWN BY	DATE	DRAWING NO.
HAVEMAN	11-7-95	124403
CHECKED BY	SCALE	SHEET OF REV.
RJH		

THIS DRAWING IS THE PROPERTY OF HAYES MFG. INC. AND IS LOANED SUBJECT TO THE CONDITION THAT IT SHALL NOT BE REPRODUCED, COPIED, LOANED OR OTHERWISE DISPOSED OF, DIRECTLY OR INDIRECTLY. IT SHALL BE USED AS A MEANS OF REFERENCE TO WORK FURNISHED BY THIS COMPANY ONLY AND IS NOT TO BE SUBMITTED TO OUTSIDE PARTIES FOR EXAMINATION WITHOUT OUR CONSENT.

COPYRIGHT ©2000-2006 by Hayes Manufacturing, Inc.

06/27/2006 10:47:44 AM