REV	DATE	CHANGE DESCRIPTION	MOD.BY	CK1	CK2
C	11/04/2002	CHANGED HUB FROM 124284-41 TO 126947-41	ZS	RJH	HM

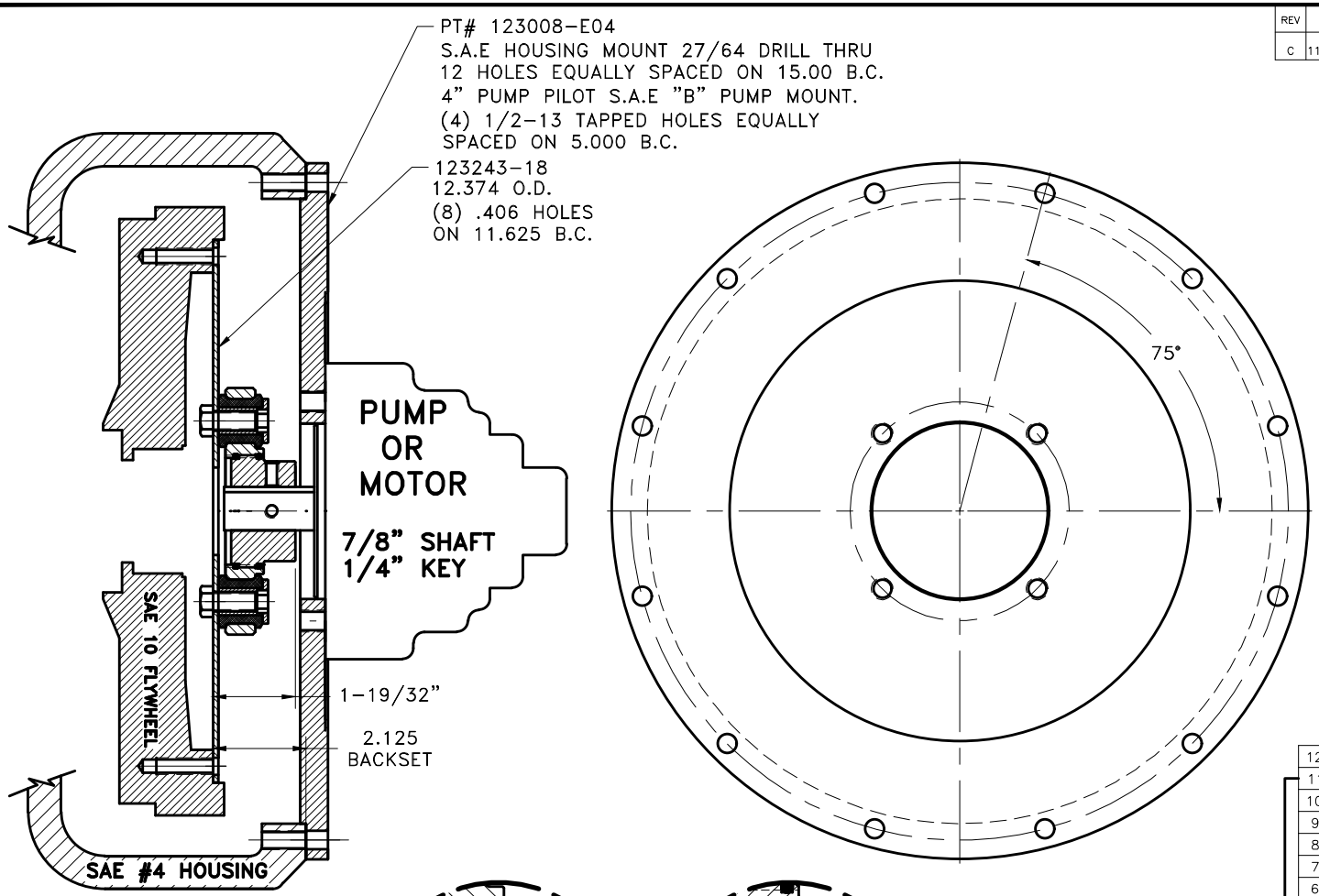

UP TO 110 HP

DET.	PART NUMBER	DESCRIPTION	QTY.
12	123008-E04	PUMP MOUNT PLATE	1
11	801912	GREASE	1
10	PURCHASE	5/16-18 x 5/8" SSSCP	1
9	PURCHASE	5/16-18 x 1/2" SSSCP	1
8	568-143	O-RING (124473)	1
7	568-142	O-RING (126947-41)	1
6	HX200	7/16-20 x 1" HHB	6
5	123727	THREADED BUSHING	6
4	H62500	NEOPRENE INSERT	6
3	126947-41	EXTERNAL SPLINED HUB	1
2	124473	INTERNAL SPLINED HUB	1
1	123243-18	FLYWHEEL PLATE	1

COUPLING ASS'Y #124995

NOTE: REMOVE HUB FROM ASS'Y PRESET HUB ON SHAFT AND REASSEMBLE USING NUT AND BOLT GRADE LOC-TITE ON SET SCREWS

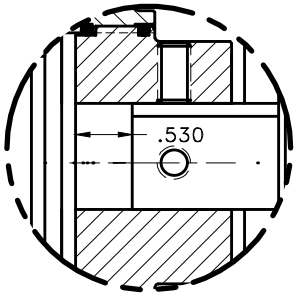

1.62 SHAFT LENGHT

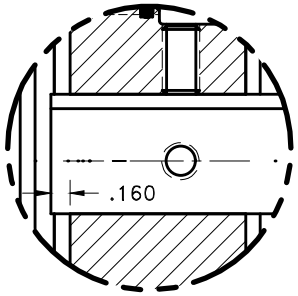

2.31 SHAFT LENGTH

SYMBOLS
- FLATNESS
- STRAIGHTNESS
- ANGULARITY
- PERPENDICULARITY
- PARALLELISM
- CONCENTRICITY
- TRUE POSITION
- ROUNDNESS
- CIRCULAR RUN OUT
- TOTAL RUN OUT
- CYLINDRICITY
- FINISH

DO NOT SCALE DRAWING

TOLERANCES UNLESS OTHERWISE SPECIFIED
125 MAXIMUM
ANGLE ±1/2°
FRACTION ±1/32
DECIMAL
.00 ±.01
.000 ±.005
.0000 ±.0005

HAYES MANUFACTURING INC. ®

TITLE: FLYWHEEL COUPLING ASS'Y WITH PUMP MOUNT PLATE

MATERIAL

CLASS

MAKE: ☐ BUY: ☐

DESCRIPTION

DRAWN BY: SIETING

DATE: 4-27-98

CHECKED BY: RJH

SCALE

DRAWING NO. 124994

SHEET OF REV.

THIS DRAWING IS THE PROPERTY OF HAYES MFG. INC. AND IS LOANED SUBJECT TO THE CONDITION THAT IT SHALL NOT BE REPRODUCED, COPIED, LOANED OR OTHERWISE DISPOSED OF, DIRECTLY OR INDIRECTLY. IT SHALL BE USED AS A MEANS OF REFERENCE TO WORK FURNISHED BY THIS COMPANY ONLY AND IS NOT TO BE SUBMITTED TO OUTSIDE PARTIES FOR EXAMINATION WITHOUT OUR CONSENT.

COPYRIGHT ©2000-2017 by Hayes Manufacturing, Inc. All rights reserved.