REV	DATE	CHANGE DESCRIPTION	MOD.BY	CK1	CK2
A	02/21/2002	CHANGED TO BOLTED ASS'Y	ZS	RJH	HM

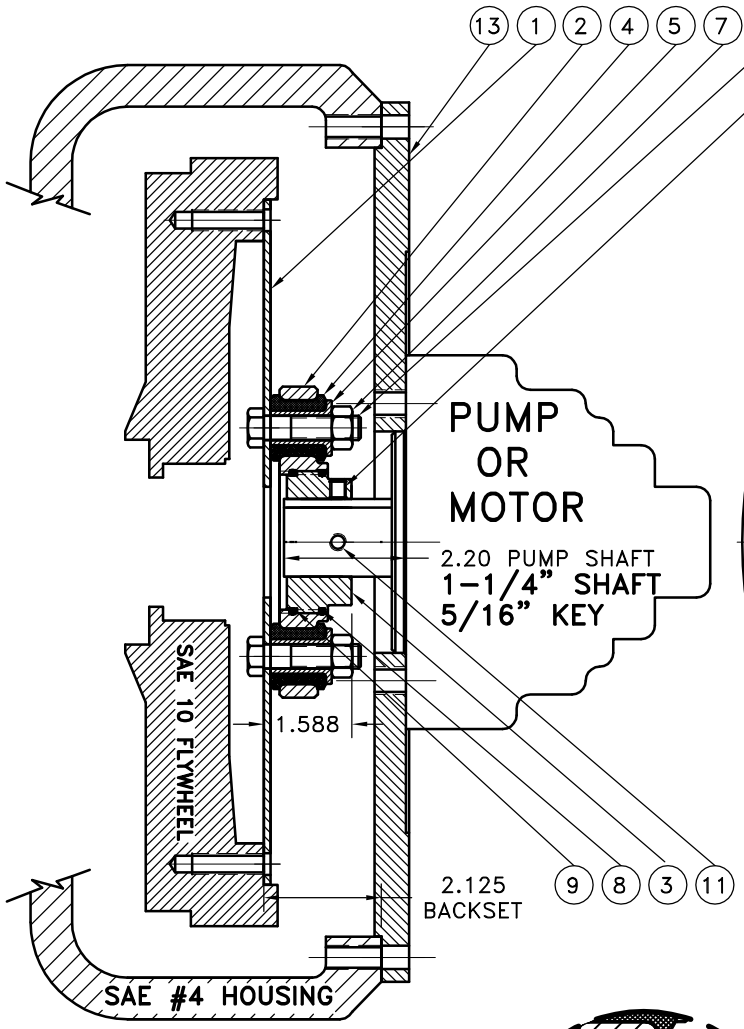

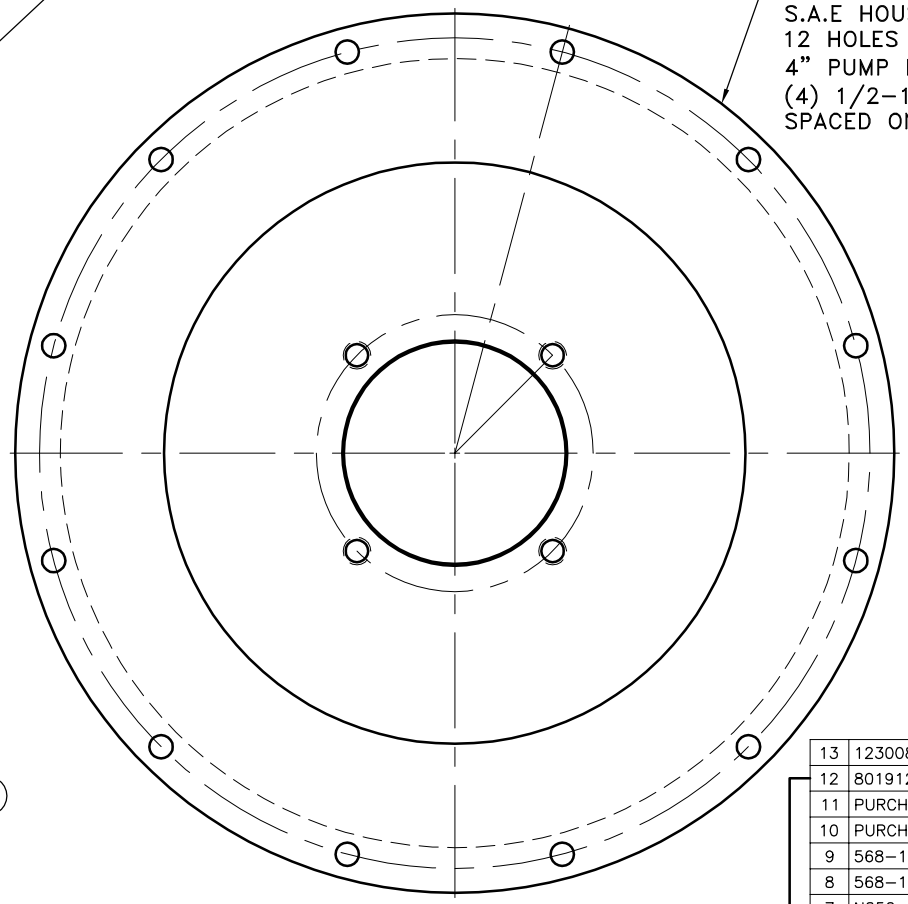

UP TO 110 HP

13	123008-E04	PUMP MOUNT PLATE	1
12	801912	GREASE	1
11	PURCHASE	5/16-18x1/2 SSSCP	1
10	PURCHASE	5/16-18x3/8 SSSCP	1
9	568-143	O-RINGS (124473)	1
8	568-142	O-RINGS (124284-43)	1
7	N250	7/16-20 NUT	6
6	HX230	7/16-20 x 1-3/4" HHB	6
5	123000-00	STEEL BUSHING	6
4	H62500	NEOPRENE INSERT	6
3	124284-43	EXTERNAL SPLINED ADAPTER	1
2	124473	INTERNAL SPLINED HUB	1
1	123243-18	FLYWHEEL PLATE	1

COUPLING ASS'Y #124604

NOTE: REMOVE HUB FROM ASS'Y, PRESET HUB ON SHAFT & RE- ASSEMBLE USING NUT & BOLT GRADE LOC-TITE ON SET SCREWS

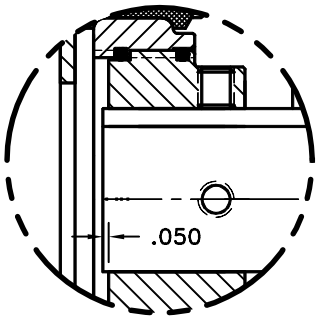

2.20 SHAFT LENGTH

SYMBOLS
- FLATNESS
- STRAIGHTNESS
- ANGULARITY
- SQUARENESS
- PARALLELISM
- CONCENTRICITY
- TRUE POSITION
- ROUNDNESS
- CIRCULAR RUN OUT
- TOTAL RUN OUT
- CYLINDRICITY
- FINISH

DET.	PART NUMBER	DESCRIPTION	QTY.

DO NOT SCALE DRAWING

TOLERANCES UNLESS OTHERWISE SPECIFIED
125√ MAXIMUM
ANGLE ±1/2°
FRACTION ±1/32
DECIMAL
.00 ±.01
.000 ±.005
.0000 ±.0005

HAYES MANUFACTURING INC. ®

TITLE FLYWHEEL COUPLING ASS'Y WITH PUMP MOUNT PLATE

MATERIAL

– UNLESS OTHERWISE SPECIFIED –
REMOVE FIRST THREAD ON ALL TAPPED HOLES
BREAK ALL SHARP CORNERS .010 TO .020
STAMP OR MARK DRAWING NO.

DRAWN BY	DATE	DRAWING NO.
SIETING	11-25-98	125266
CHECKED BY RJH	SCALE	SHEET OF REV.

THIS DRAWING IS THE PROPERTY OF HAYES MFG. INC. AND IS LOANED SUBJECT TO THE CONDITION THAT IT SHALL NOT BE REPRODUCED, COPIED, LOANED OR OTHERWISE DISPOSED OF, DIRECTLY OR INDIRECTLY. IT SHALL BE USED AS A MEANS OF REFERENCE TO WORK FURNISHED BY THIS COMPANY ONLY AND IS NOT TO BE SUBMITTED TO OUTSIDE PARTIES FOR EXAMINATION WITHOUT OUR CONSENT.

COPYRIGHT ©2000-2006 by Hayes Manufacturing, Inc.

06/29/2006 05:01:52 PM