| REV | DATE | CHANGE DESCRIPTION | MOD.BY | CK1 | CK2 |
|---|---|---|---|---|---|
| A | 12/09/2008 | CHANGED TO THREADED INSERTS. | ZS | MH | HM |

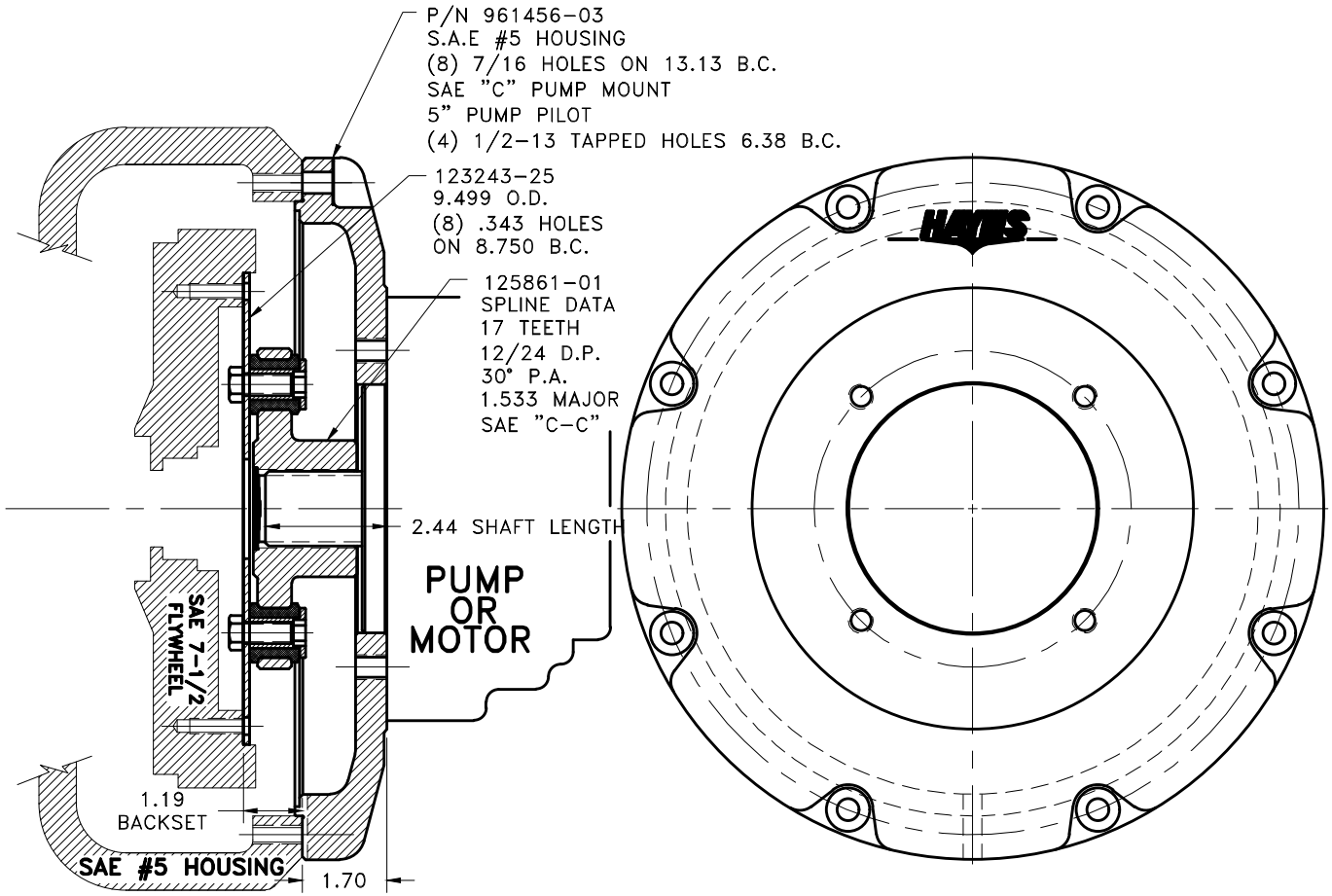


## UP TO 250 HP

| | | | | |
|---|---|---|---|---|
| | 8 | 961456-03 | SAE 5 DISHED HOUSING | 1 |
| | 7 | 801912 | GREASE | 1 |
| | 6 | HP-1625-S-32 | GREASE PLUG | 1 |
| | 5 | HX200 | 7/16-20 x 1" HHB | 10 |
| | 4 | 123727 | THREADED BUSHING | 10 |
| | 3 | H62500 | NEOPRENE INSERT | 10 |
| COUPLING ASS'Y #125860 | 2 | 125861-01 | COUPLING HUB | 1 |
| | 1 | 123243-25 | FLYWHEEL PLATE | 1 |

| DET. | PART NUMBER | DESCRIPTION | QTY. |
|---|---|---|---|

SYMBOLS
- FLATNESS
- STRAIGHTNESS
- ANGULARITY
- PERPENDICULARITY
- PARALLELISM
- CONCENTRICITY
- TRUE POSITION
- ROUNDNESS
- CIRCULAR RUN OUT
- TOTAL RUN OUT
- CYLINDRICITY
- FINISH

DO NOT SCALE DRAWING

TOLERANCES UNLESS OTHERWISE SPECIFIED
125 MAXIMUM
ANGLE ±1/2°
FRACTION ±1/32
DECIMAL
.00 ±.01
.000 ±.005
.0000 ±.0005

HAYES MANUFACTURING INC. ®

TITLE: FLYWHEEL COUPLING ASS'Y WITH DISHED HOUSING

MATERIAL

CLASS

MAKE: ☐ BUY: ☐

DESCRIPTION

DRAWN BY: SIETING

DATE: 03-23-00

CHECKED BY: RJH

SCALE

DRAWING NO. 125859

SHEET OF REV.

THIS DRAWING IS THE PROPERTY OF HAYES MFG. INC. AND IS LOANED SUBJECT TO THE CONDITION THAT IT SHALL NOT BE REPRODUCED, COPIED, LOANED OR OTHERWISE DISPOSED OF, DIRECTLY OR INDIRECTLY. IT SHALL BE USED AS A MEANS OF REFERENCE TO WORK FURNISHED BY THIS COMPANY ONLY AND IS NOT TO BE SUBMITTED TO OUTSIDE PARTIES FOR EXAMINATION WITHOUT OUR CONSENT.

COPYRIGHT ©2000-2017 by Hayes Manufacturing, Inc. All rights reserved.