REV	DATE	CHANGE DESCRIPTION	MOD.BY	CK1	CK2
A1	04/24/2003	FIXED P/N.	ZS	HM	RJH

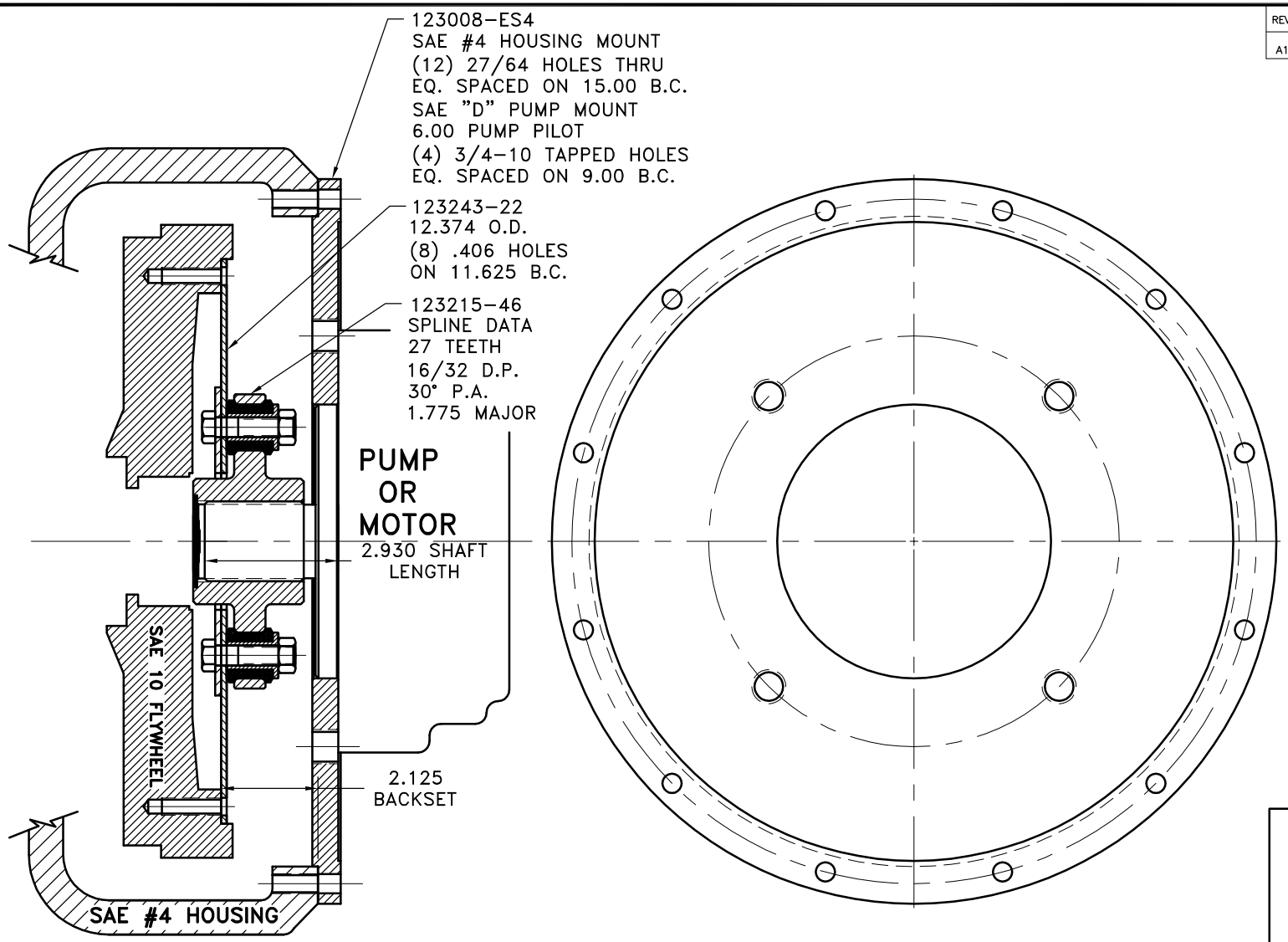

UP TO 150 HP

10	123008-ES4	PUMP MOUNT PLATE [4]	1
9	801912	GREASE	1
8	HP-2000-S-62	HUBBARD PLUG	1
7	123000-00	STEEL BUSHING	8
6	N250	7/16-20 NUT	8
5	HX230	7/16-20 x 1 3/4" HHB	8
4	H62500	NEOPRENE INSERT	8
3	123215-46	COUPLING HUB [27 16/32\5.000]	1
2	124657-02	BACKING PLATE	1
1	123243-22	FLYWHEEL PLATE [10\5.000]	1

COUPLING ASS'Y #127118

SYMBOLS
FLATNESS
STRAIGHTNESS
ANGULARITY
SQUARENESS
PARALLELISM
CONCENTRICITY
TRUE POSITION
ROUNDNESS
CIRCULAR RUN OUT
TOTAL RUN OUT
CYLINDRICITY
FINISH

DET. | PART NUMBER | DESCRIPTION | QTY.

DO NOT SCALE DRAWING

TOLERANCES UNLESS OTHERWISE SPECIFIED
125 MAXIMUM
ANGLE ±1/2°
FRACTION ±1/32
DECIMAL
.00 ±.01
.000 ±.005
.0000 ±.0005

HAYES MANUFACTURING INC. ®

TITLE
FLYWHEEL COUPLING ASS'Y WITH PUMP MOUNT PLATE

MATERIAL

– UNLESS OTHERWISE SPECIFIED –
REMOVE FIRST THREAD
ON ALL TAPPED HOLES
BREAK ALL SHARP CORNERS .010 TO .020
STAMP OR MARK DRAWING NO.

DRAWN BY	DATE	DRAWING NO.
SIETING	03-04-03	127106
CHECKED BY	SCALE	SHEET OF REV.
RJH		

THIS DRAWING IS THE PROPERTY OF HAYES MFG. INC. AND IS LOANED SUBJECT TO THE CONDITION THAT IT SHALL NOT BE REPRODUCED, COPIED, LOANED OR OTHERWISE DISPOSED OF, DIRECTLY OR INDIRECTLY. IT SHALL BE USED AS A MEANS OF REFERENCE TO WORK FURNISHED BY THIS COMPANY ONLY AND IS NOT TO BE SUBMITTED TO OUTSIDE PARTIES FOR EXAMINATION WITHOUT OUR CONSENT.

COPYRIGHT ©2000-2006 by Hayes Manufacturing, Inc.

06/29/2006 03:58:45 PM