REV	DATE	CHANGE DESCRIPTION	MOD.BY	CK1	CK2
C	06/03/2010	CHANGED BEARING P/N TO 208WD	ZS	RJH	HM

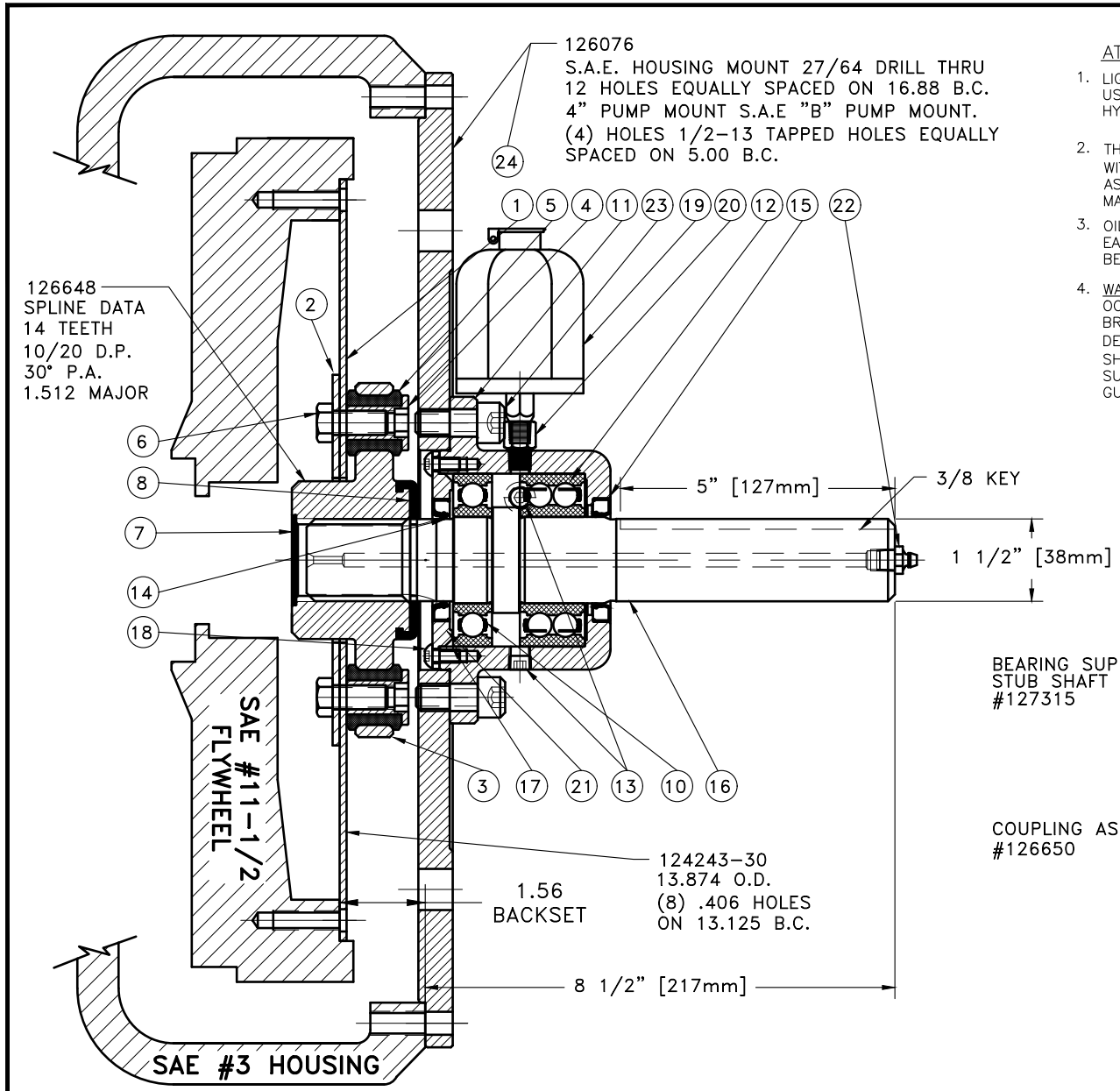

ATTENTION!!!

1. LIGHTLY GREASE INTERNAL AND EXTERNAL AREA OF SPLINE AT ASSEMBLY USING COUPLING GREASE (OVER GREASING COULD CAUSE A HYDRAULIC TYPE LIFT ON SEALS).
2. THE BEARING HOUSING IS SHIPPED FILLED TO OVERFLOW WITH MOBILE 1 5W/30 (3/4 OF A QUART). ONCE ASSEMBLY HAS BEEN INSTALLED ON ENGINE, CHECK TO MAKE SURE THAT OIL IS STILL FULL.
3. OIL MUST BE CHANGED EVERY 800-1000 HOURS OR EACH MONTH WHICH EVER COMES FIRST. RECORDS MUST BE KEPT ON OIL CHANGES OR WARRANTY WILL BE VOID.
4. WARNING!!! INJURY OR DEATH FROM A ROTATING STUB SHAFT CAN OCCUR IF A CONDITION EXISTS WHICH WOULD CAUSE THE SHAFT TO BREAK OR COME APART FROM ANY PART OF THE ASSEMBLY. DEPENDING UPON THE APPLICATION (FOR EXAMPLE, FAN, PULLEY, SHEAVE, ETC.), THE AREA AROUND THE STUB SHAFT MUST BE SUFFICIENTLY GUARDED SO THAT IN THE EVENT OF FAILURE, THE GUARD WILL CONTAIN ANY AIRBORNE PARTS.

24	126076	PUMP MOUNT PLATE	1
23	BOLT	1/2-13-1-1/8 SHCS D	4
22	600000	GREASE ZERK	1
21	126652	REAR SEAL ADAPTER	1
20	50785K250	1/8-27 M/F ADAPTER	1
19	31141	OIL RESERVOIR	1
18	BOLT	1/4-20x1/2 BUTTON HEAD	6
17	568-151	O-RING	1
16	127313	SPLINED SHAFT	1
15	15830	SEAL	1
14	CR 14903	SEAL	1
13	1/8-27	DRAIN/OVERFLOW PLUG	4
12	5208WD	DOUBLE BEARING	1
11	126646	BEARING HOUSING	1
10	208WD	BEARING	1
9	801912	GREASE	1
8	S14T1020	MOLDED SEAL	1
7	R-0017-02	GREASE PLUG	1
6	BOLT	7/16-20x1 HHB Y D	10
5	H62500	NEOPRENE INSERT	10
4	123727	THREADED BUSHING	10
3	126648	COUPLING HUB	1
2	124657-03	BACKING PLATE	1
1	124243-30	FLYWHEEL PLATE	1

BEARING SUPPORTED STUB SHAFT SUB-ASS'Y #127315

COUPLING ASS'Y #126650

SYMBOLS: FLATNESS, STRAIGHTNESS, ANGULARITY, PERPENDICULARITY, PARALLELISM, CONCENTRICITY, TRUE POSITION, ROUNDNESS, CIRCULAR RUN OUT, TOTAL RUN OUT, CYLINDRICITY, FINISH

DET. | PART NUMBER | DESCRIPTION | QTY.

DO NOT SCALE DRAWING

TOLERANCES UNLESS OTHERWISE SPECIFIED
125 MAXIMUM
ANGLE ±1/2°
FRACTION ±1/32
DECIMAL
.00 ±.01
.000 ±.005
.0000 ±.0005

HAYES MANUFACTURING INC. ®

TITLE: BEARING SUPPORTED STUB SHAFT ASS'Y

MATERIAL

CLASS | MAKE: ☐ BUY: ☐

DESCRIPTION

DRAWN BY: SIETING | DATE: 09-11-03 | CHECKED BY | SCALE

DRAWING NO. 127314

SHEET OF REV.

THIS DRAWING IS THE PROPERTY OF HAYES MFG. INC. AND IS LOANED SUBJECT TO THE CONDITION THAT IT SHALL NOT BE REPRODUCED, COPIED, LOANED OR OTHERWISE DISPOSED OF, DIRECTLY OR INDIRECTLY. IT SHALL BE USED AS A MEANS OF REFERENCE TO WORK FURNISHED BY THIS COMPANY ONLY AND IS NOT TO BE SUBMITTED TO OUTSIDE PARTIES FOR EXAMINATION WITHOUT OUR CONSENT.

COPYRIGHT ©2000-2017 by Hayes Manufacturing, Inc. All rights reserved.