REV	DATE	CHANGE DESCRIPTION	MOD.BY	CK1	CK2
A	11/29/2006	CHANGED DIMENSIONS TOLERACE.	ZS	RJH	HM

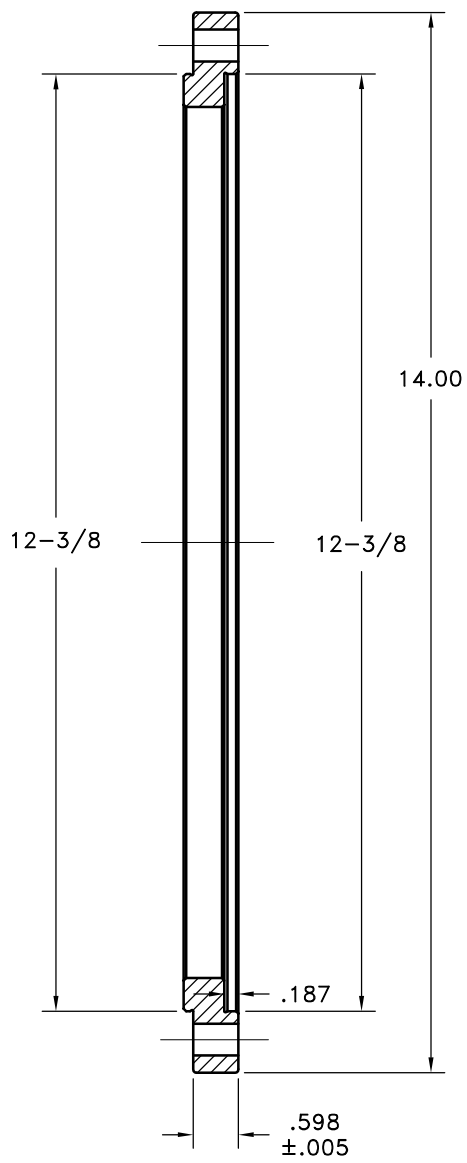

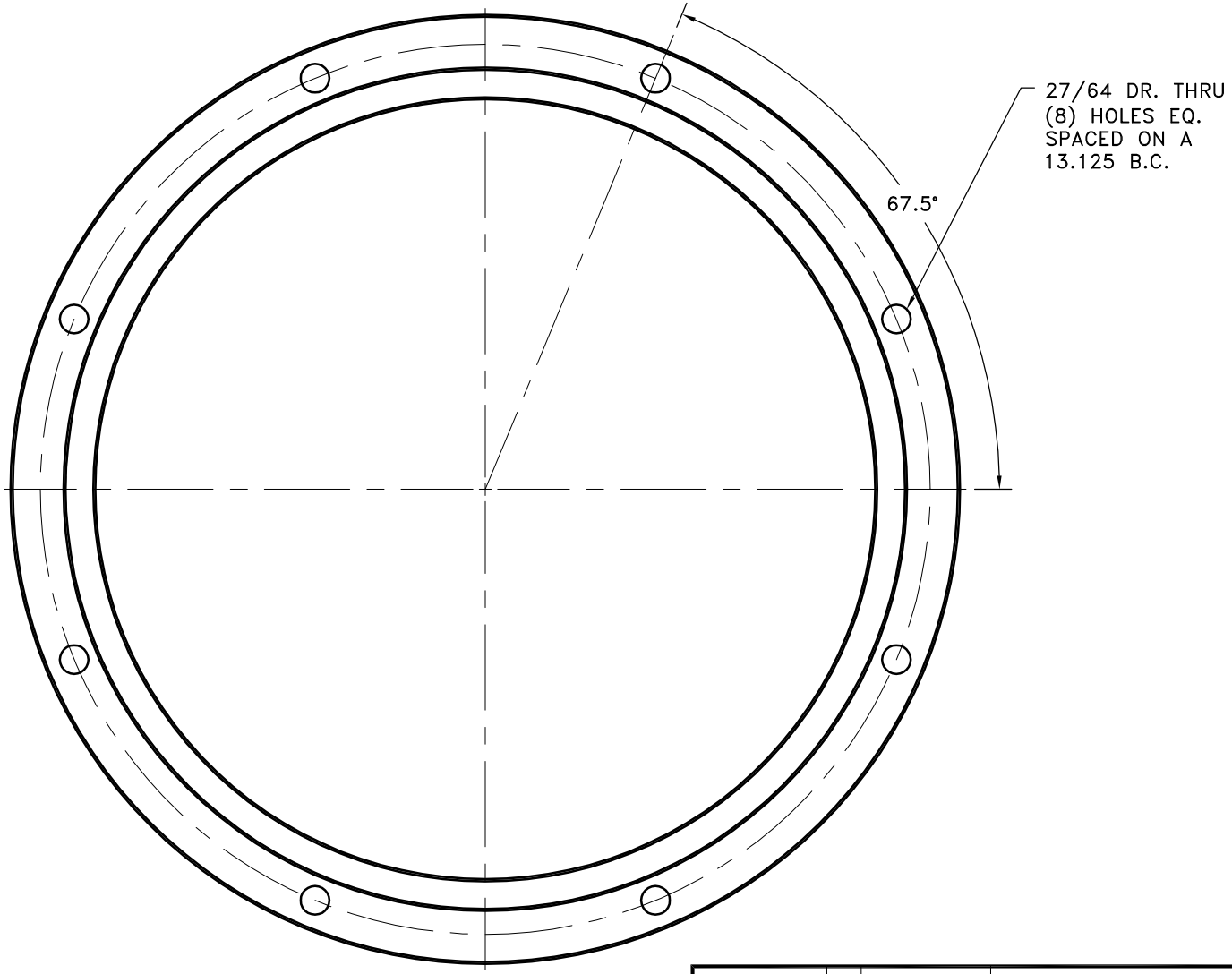

SYMBOLS
- FLATNESS
- STRAIGHTNESS
- ANGULARITY
- SQUARENESS
- PARALLELISM
- CONCENTRICITY
- TRUE POSITION
- ROUNDNESS
- CIRCULAR RUN OUT
- TOTAL RUN OUT
- CYLINDRICITY
- FINISH

DET.	PART NUMBER	DESCRIPTION	QTY.

DO NOT SCALE DRAWING

TOLERANCES UNLESS OTHERWISE SPECIFIED
125 MAXIMUM
ANGLE ±1/2°
FRACTION ±1/32
DECIMAL
.00 ±.01
.000 ±.005
.0000 ±.0005

HAYES MANUFACTURING INC. ®

TITLE: SAE 5 TO 5 SPACER

MATERIAL: 128367-C

– UNLESS OTHERWISE SPECIFIED –
REMOVE FIRST THREAD ON ALL TAPPED HOLES
BREAK ALL SHARP CORNERS .010 TO .020
STAMP OR MARK DRAWING NO.

DRAWN BY	DATE	DRAWING NO.
SIETING	09-14-06	128367
CHECKED BY: RJH	SCALE	SHEET OF REV.

THIS DRAWING IS THE PROPERTY OF HAYES MFG. INC. AND IS LOANED SUBJECT TO THE CONDITION THAT IT SHALL NOT BE REPRODUCED, COPIED, LOANED OR OTHERWISE DISPOSED OF, DIRECTLY OR INDIRECTLY. IT SHALL BE USED AS A MEANS OF REFERENCE TO WORK FURNISHED BY THIS COMPANY ONLY AND IS NOT TO BE SUBMITTED TO OUTSIDE PARTIES FOR EXAMINATION WITHOUT OUR CONSENT.

COPYRIGHT ©2000–2007 by Hayes Manufacturing, Inc. All rights reserved.