REV	DATE	CHANGE DESCRIPTION	MOD.BY	CK1	CK2
C1	05/10/2016	RENUMBERED BOM	BSL	JM	ML

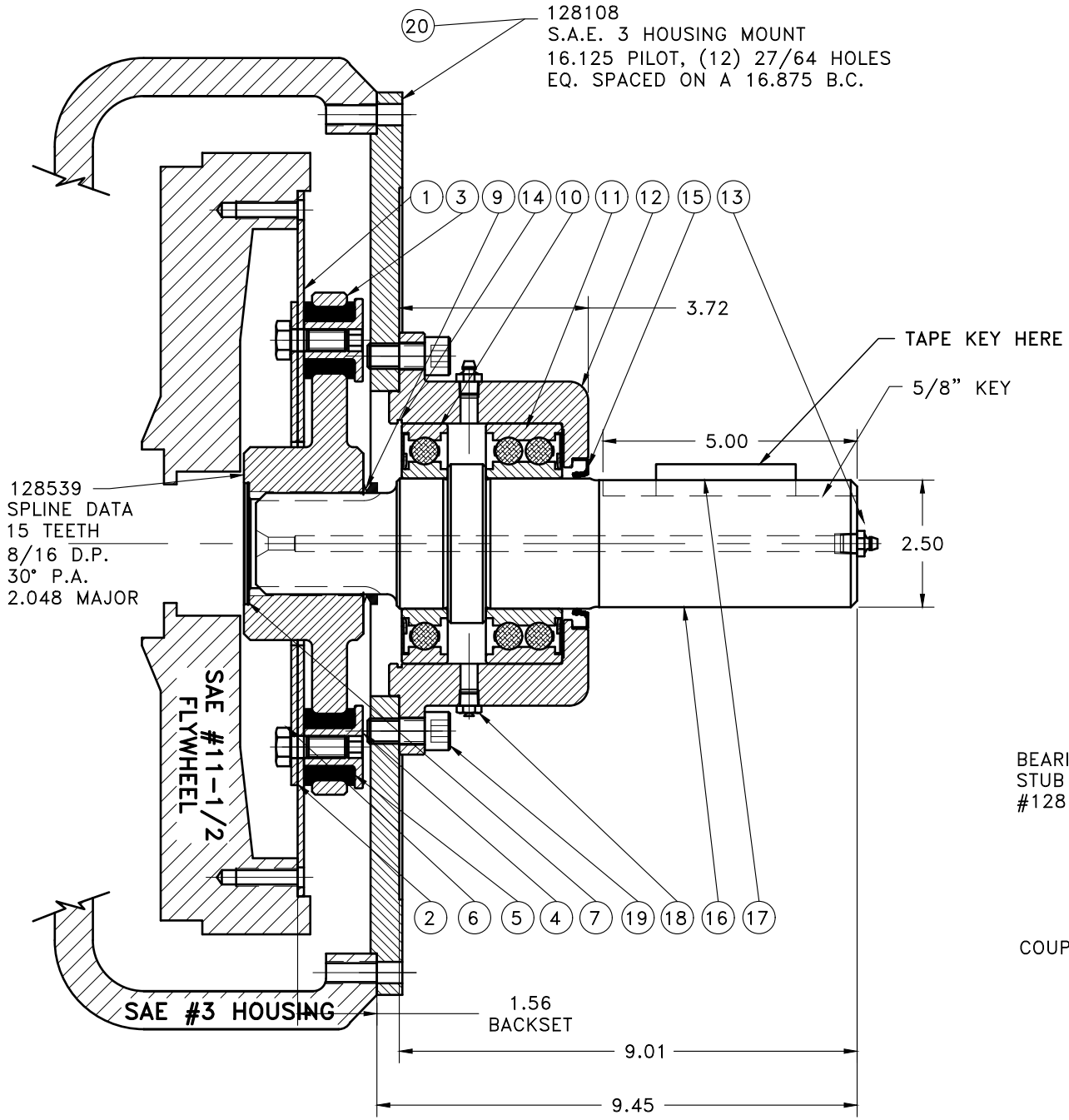

NOTES:

1. LIGHTLY GREASE INTERNAL AND EXTERNAL AREA OF SPLINE AT ASSEMBLY USING SUPPLIED COUPLING GREASE (OVER GREASING COULD CAUSE A HYDRAULIC TYPE LIFT ON SEALS).

2. GREASE BEARING HOUSING UNTIL PIN EXTENDS FROM PRESSURE RELIEF VALVE (LOCATED 180° FROM GREASE ZERT). USE OF AN UNLEADED EXTREME PRESSURE LITHIUM GREASE, WITH NLGI NO.2 GRADE IS RECOMMENDED. RUN TIME BETWEEN GREASINGS NOT TO EXCEED 2,000 HOURS.

3. WARNING!!! INJURY OR DEATH FROM A ROTATING STUB SHAFT CAN OCCUR IF A CONDITION EXISTS WHICH WOULD CAUSE THE SHAFT TO BREAK OR COME APART FROM ANY PART OF THE ASSEMBLY. DEPENDING UPON THE APPLICATION (FOR EXAMPLE, FAN, PULLEY, SHEAVE, ETC.), THE AREA AROUND THE STUB SHAFT MUST BE SUFFICIENTLY GUARDED SO THAT IN THE EVENT OF FAILURE, THE GUARD WILL CONTAIN ANY AIRBORNE PARTS.

ASSEMBLY NOTE:

ENSURE THAT THE GREASE ZERT AND RELIEF VALVE ARE LOCATED HORIZONTAL WHEN MOUNTING ON TO PUMP MOUNT PLATE OR HOUSING.

	DET.	PART NUMBER	DESCRIPTION	QTY.
	20	128108	PUMP MOUNT PLATE	1
	19	BOLT	1/2-13x1-1/8 SHCS	6
	18	1093K11	RELIEF VALVE	1
BEARING SUPPORTED STUB SHAFT SUB-ASS'Y #128107	17	128808	5/8 SQ KEY	1
	16	128106	SPLINED SHAFT	1
	15	25420	SEAL	1
	14	RR-472	SPIROLOX RETAINER	1
	13	600000	GREASE ZERT	2
	12	128105	BEARING HOUSING	1
	11	5213E/C3	DOUBLE ROLLER BEARING	1
	10	213WDN	SINGLE ROLLER BEARING	1
	9	400500	V-RING SEAL	1
COUPLING ASS'Y 128541	8	801912	GREASE	1
	7	R-0017-03	GREASE PLUG	1
	6	BOLT	7/16-20x1 HHB	14
	5	H92500	NEOPRENE INSERT	14
	4	124412	THREADED BUSHING	14
	3	128539	COUPLING HUB	1
	2	128540	BACKING PLATE	1
	1	127076-48	FLYWHEEL PLATE	1

SYMBOLS
FLATNESS
STRAIGHTNESS
ANGULARITY
PERPENDICULARITY
PARALLELISM
CONCENTRICITY
TRUE POSITION
ROUNDNESS
CIRCULAR RUN OUT
TOTAL RUN OUT
CYLINDRICITY
FINISH

DO NOT SCALE DRAWING
TOLERANCES UNLESS OTHERWISE SPECIFIED
125 MAXIMUM
ANGLE ±1/2°
FRACTION ±1/32
DECIMAL
.00 ±.01
.000 ±.005
.0000 ±.0005

HAYES MANUFACTURING INC. ®

TITLE
BEARING SUPPORTED STUB SHAFT ASS'Y

MATERIAL

CLASS
BS ASSY

MAKE: [X] BUY: [ ]

DESCRIPTION
11-1/2,3,2-1/2,5

DRAWN BY
SIETING

DATE
02-20-07

DESIGN LEAD
RJH

SCALE

DRAWING NO.
128538

SHEET OF REV.

THIS DRAWING IS THE PROPERTY OF HAYES MFG. INC. AND IS LOANED SUBJECT TO THE CONDITION THAT IT SHALL NOT BE REPRODUCED, COPIED, LOANED OR OTHERWISE DISPOSED OF, DIRECTLY OR INDIRECTLY. IT SHALL BE USED AS A MEANS OF REFERENCE TO WORK FURNISHED BY THIS COMPANY ONLY AND IS NOT TO BE SUBMITTED TO OUTSIDE PARTIES FOR EXAMINATION WITHOUT OUR CONSENT.

COPYRIGHT ©2000-2019 by Hayes Manufacturing, Inc. All rights reserved.