REV	DATE	CHANGE DESCRIPTION	MOD.BY	CK1	CK2
A	10/01/2014	ADDED BACKING PLATE 128142	ZS	HM	JM

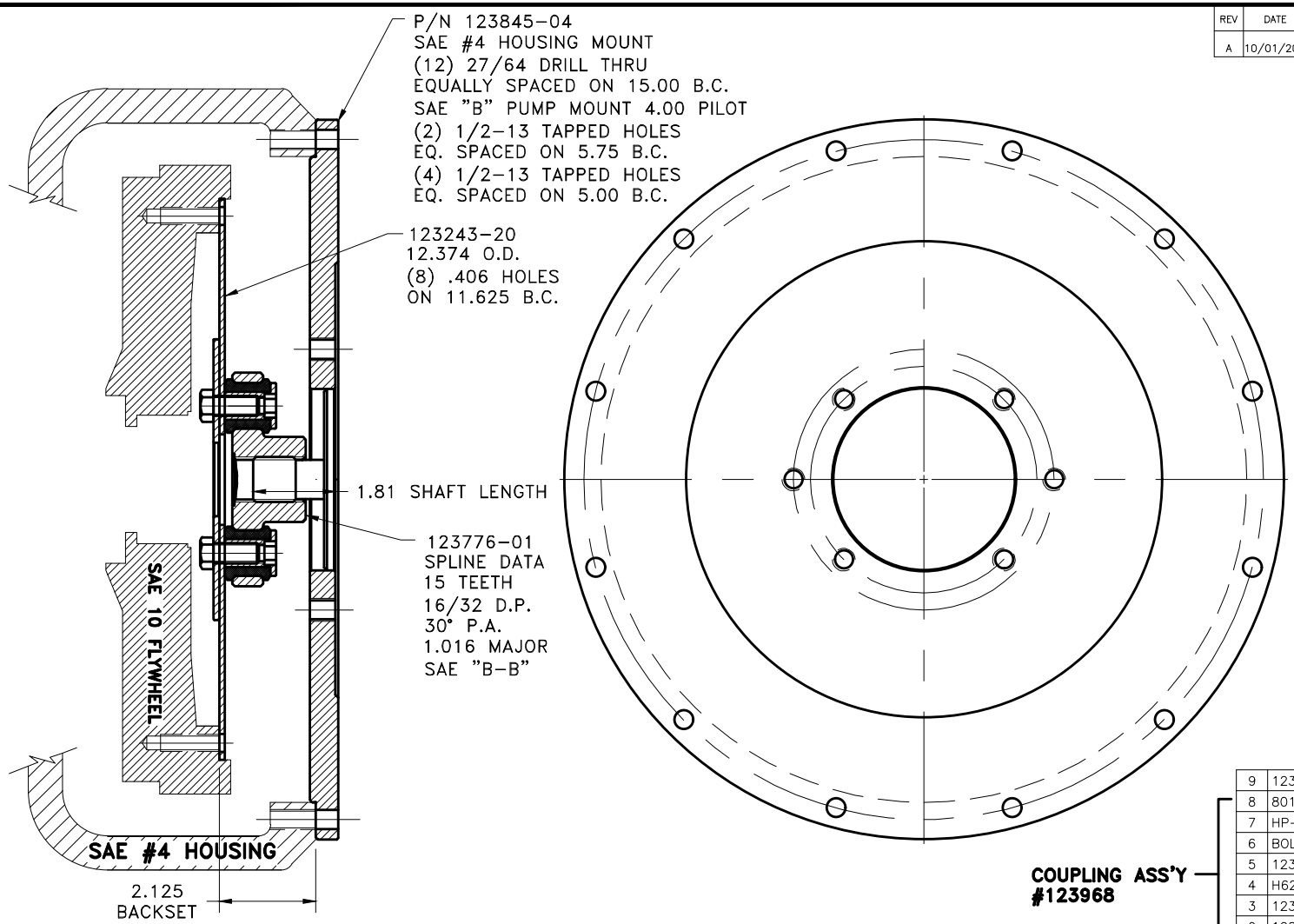

UP TO 65 HP

COUPLING ASS'Y #123968

9	123845-04	PUMP MOUNT PLATE	1
8	801912	GREASE	1
7	HP-1125-S-32	HUBBARD PLUG	1
6	BOLT	7/16-20x1 HHB Y D	6
5	123727	THREADED BUSHING	6
4	H62500	NEOPRENE INSERT	6
3	123776-01	COUPLING HUB	1
2	128142	BACKING PLATE	1
1	123243-20	FLYWHEEL PLATE	1

DET.	PART NUMBER	DESCRIPTION	QTY.

SYMBOLS
- FLATNESS
- STRAIGHTNESS
- ANGULARITY
- PERPENDICULARITY
- PARALLELISM
- CONCENTRICITY
- TRUE POSITION
- ROUNDNESS
- CIRCULAR RUN OUT
- TOTAL RUN OUT
- CYLINDRICITY
- FINISH

DO NOT SCALE DRAWING

TOLERANCES UNLESS OTHERWISE SPECIFIED
125 MAXIMUM
ANGLE ±1/2°
FRACTION ±1/32
DECIMAL
.00 ±.01
.000 ±.005
.0000 ±.0005

HAYES MANUFACTURING INC. ®

TITLE
FLYWHEEL COUPLING ASS'Y WITH PUMP MOUNT PLATE

MATERIAL

CLASS

MAKE: ☐ BUY: ☐

DESCRIPTION

DRAWN BY: SIETING
DATE: 08-26-2009
CHECKED BY
SCALE

DRAWING NO. 129584
SHEET OF REV.

THIS DRAWING IS THE PROPERTY OF HAYES MFG. INC. AND IS LOANED SUBJECT TO THE CONDITION THAT IT SHALL NOT BE REPRODUCED, COPIED, LOANED OR OTHERWISE DISPOSED OF, DIRECTLY OR INDIRECTLY. IT SHALL BE USED AS A MEANS OF REFERENCE TO WORK FURNISHED BY THIS COMPANY ONLY AND IS NOT TO BE SUBMITTED TO OUTSIDE PARTIES FOR EXAMINATION WITHOUT OUR CONSENT.

COPYRIGHT ©2000-2017 by Hayes Manufacturing, Inc. All rights reserved.