REV	DATE	CHANGE DESCRIPTION	MOD.BY	CK1	CK2

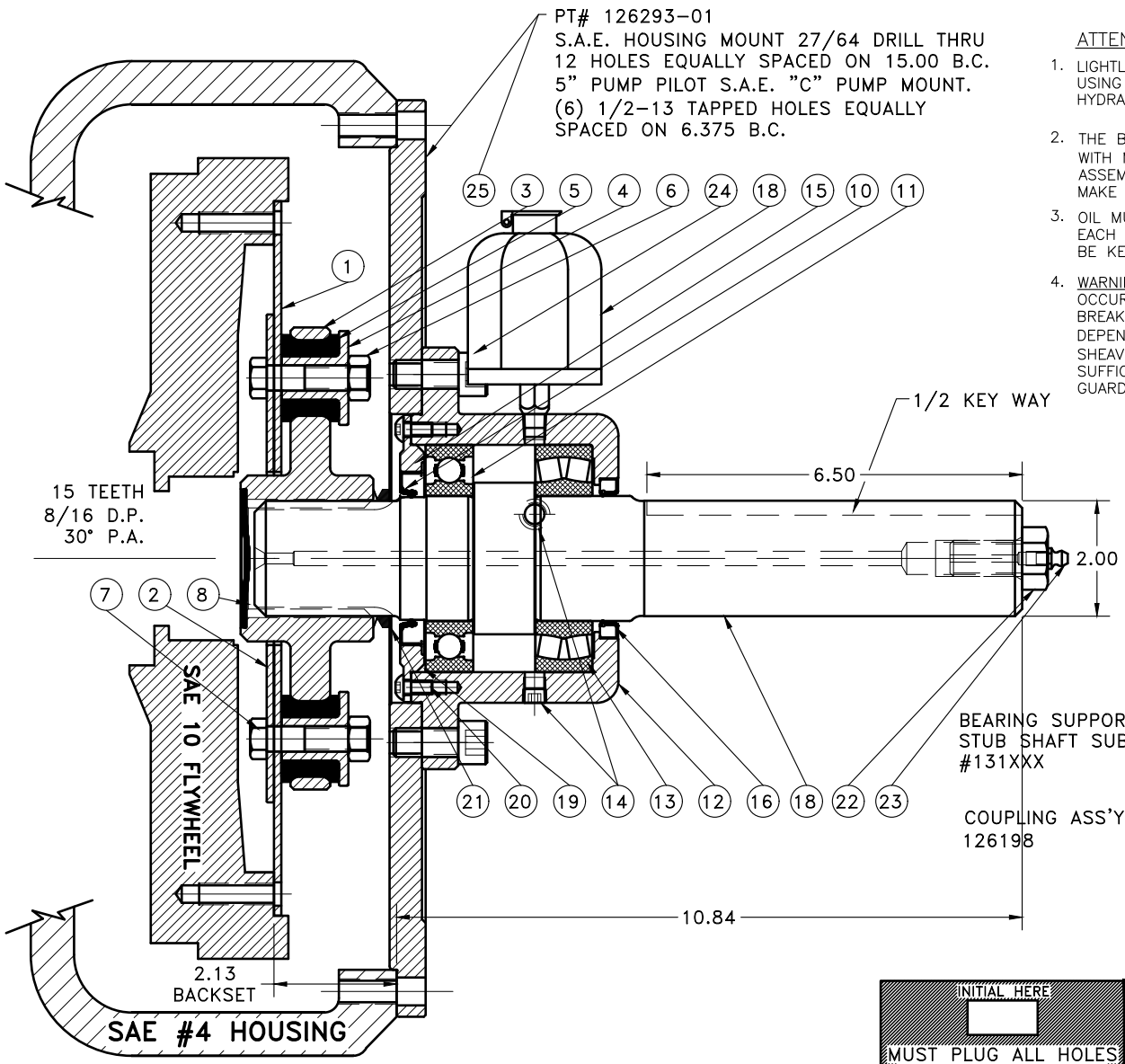

ATTENTION!!!

1. LIGHTLY GREASE INTERNAL AND EXTERNAL AREA OF SPLINE AT ASSEMBLY USING COUPLING GREASE (OVER GREASING COULD CAUSE A HYDRAULIC TYPE LIFT ON SEALS).
2. THE BEARING HOUSING IS SHIPPED FILLED TO OVERFLOW WITH MOBILE 1 5W/30 (3/4 OF A QUART). ONCE ASSEMBLY HAS BEEN INSTALLED ON ENGINE, CHECK TO MAKE SURE THAT OIL IS STILL FULL.
3. OIL MUST BE CHANGED EVERY 800-1000 HOURS OR EACH MONTH WHICH EVER COMES FIRST. RECORDS MUST BE KEPT ON OIL CHANGES OR WARRANTY WILL BE VOID.
4. WARNING!!! INJURY OR DEATH FROM A ROTATING STUB SHAFT CAN OCCUR IF A CONDITION EXISTS WHICH WOULD CAUSE THE SHAFT TO BREAK OR COME APART FROM ANY PART OF THE ASSEMBLY. DEPENDING UPON THE APPLICATION (FOR EXAMPLE, FAN, PULLEY, SHEAVE, ETC.), THE AREA AROUND THE STUB SHAFT MUST BE SUFFICIENTLY GUARDED SO THAT IN THE EVENT OF FAILURE, THE GUARD WILL CONTAIN ANY AIRBORNE PARTS.

25	126293-01	PUMP MOUNT PLATE	1
24	BOLT	1/2-13x1-1/4 SHCS D	6
23	609000	GREASE ZERT	1
22	125294	SPECIAL 5/8-18 HHB	1
21	400500	V-RING	1
20	BOLT	1/4-20x1/2 BUTTON HEAD	6
19	568-154	O-RING	1
18	31141	OIL RESERVOIR	1
17	131201	SPLINED SHAFT	1
16	21610	SEAL	1
15	126645	REAR SEAL ADAPTER	1
14	1/8-27	DRAIN/OVERFLOW PLUG	3
13	22211E	SPHERICAL ROLLER BEARING	1
12	126197	BEARING HOUSING	1
11	211NP	BEARING	1
10	21163	SEAL	1
9	801912	GREASE	2
8	R-0017-03	GREASE PLUG	1
7	BOLT	7/16-20x1-3/4 HHB Y D	12
6	NUT	7/16-20 NUT Y	12
5	H92500	NEOPRENE INSERT	12
4	123706-05	STEEL BUSHING	12
3	126195	COUPLING HUB	1
2	126262-01	BACKING PLATE	1
1	124243-66	FLYWHEEL PLATE	1

INITIAL HERE

MUST PLUG ALL HOLES IN BEARING HOUSING FOR SHIPPING. PACKAGE 31141 OIL RESERVOIR SEPARATELY.

SYMBOLS
FLATNESS
STRAIGHTNESS
ANGULARITY
PERPENDICULARITY
PARALLELISM
CONCENTRICITY
TRUE POSITION
ROUNDNESS
CIRCULAR RUN OUT
TOTAL RUN OUT
CYLINDRICITY
FINISH

DET.	PART NUMBER	DESCRIPTION	QTY.

DO NOT SCALE DRAWING
TOLERANCES UNLESS OTHERWISE SPECIFIED
125 MAXIMUM
ANGLE ±1/2°
FRACTION ±1/32
DECIMAL
.00 ±.01
.000 ±.005
.0000 ±.0005

HAYES MANUFACTURING INC. ®

TITLE
BEARING SUPPORTED STUB SHAFT ASS'Y

MATERIAL

CLASS
MAKE: ☐ BUY: ☐
DESCRIPTION

DRAWN BY KNH
DATE 08/27/2013
CHECKED BY RJH
SCALE
DRAWING NO. 131196
SHEET OF REV.

THIS DRAWING IS THE PROPERTY OF HAYES MFG. INC. AND IS LOANED SUBJECT TO THE CONDITION THAT IT SHALL NOT BE REPRODUCED, COPIED, LOANED OR OTHERWISE DISPOSED OF, DIRECTLY OR INDIRECTLY. IT SHALL BE USED AS A MEANS OF REFERENCE TO WORK FURNISHED BY THIS COMPANY ONLY AND IS NOT TO BE SUBMITTED TO OUTSIDE PARTIES FOR EXAMINATION WITHOUT OUR CONSENT.

COPYRIGHT ©2000-2017 by Hayes Manufacturing, Inc. All rights reserved.