REV	DATE	CHANGE DESCRIPTION	MOD.BY	CK1	CK2

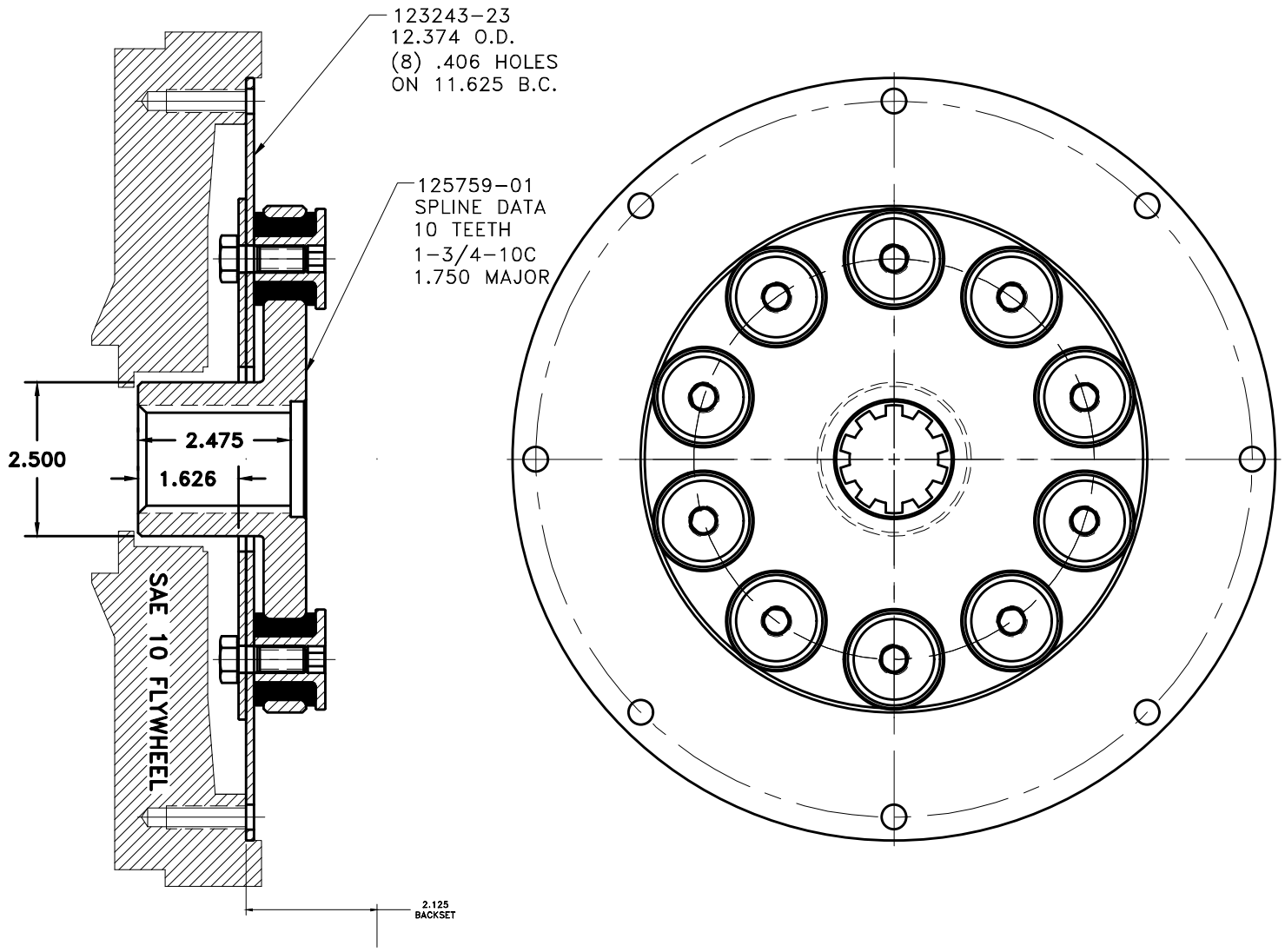

UP TO 250 HP

DET.	PART NUMBER	DESCRIPTION	QTY.
7	801912	GREASE	1
6	BOLT	7/16-20x1 HHB Y D	10
5	124412	THREADED BUSHING	10
4	H92500	NEOPRENE INSERT	10
3	125759-01	COUPLING HUB	1
2	124961-01	BACKING PLATE	1
1	123243-23	FLYWHEEL PLATE	1

SYMBOLS
FLATNESS
STRAIGHTNESS
ANGULARITY
PERPENDICULARITY
PARALLELISM
CONCENTRICITY
TRUE POSITION
ROUNDNESS
CIRCULAR RUN OUT
TOTAL RUN OUT
CYLINDRICITY
FINISH

DO NOT SCALE DRAWING
TOLERANCES UNLESS OTHERWISE SPECIFIED
125 MAXIMUM
ANGLE ±1/2°
FRACTION ±1/32
DECIMAL
.00 ±.01
.000 ±.005
.0000 ±.0005

HAYES MANUFACTURING INC. ®

TITLE
FLYWHEEL COUPLING

MATERIAL

CLASS
SAE 10

MAKE: [X] BUY: [ ]

DESCRIPTION
10,1-3/4-10C,250

DRAWN BY
SIETING

DATE
09-25-2014

CHECKED BY

SCALE

DRAWING NO.
131606

SHEET OF REV.

THIS DRAWING IS THE PROPERTY OF HAYES MFG. INC. AND IS LOANED SUBJECT TO THE CONDITION THAT IT SHALL NOT BE REPRODUCED, COPIED, LOANED OR OTHERWISE DISPOSED OF, DIRECTLY OR INDIRECTLY. IT SHALL BE USED AS A MEANS OF REFERENCE TO WORK FURNISHED BY THIS COMPANY ONLY AND IS NOT TO BE SUBMITTED TO OUTSIDE PARTIES FOR EXAMINATION WITHOUT OUR CONSENT.

COPYRIGHT ©2000-2017 by Hayes Manufacturing, Inc. All rights reserved.