| REV | DATE | CHANGE DESCRIPTION | MOD.BY | CK1 | CK2 |
|---|---|---|---|---|---|
| | | | | | |

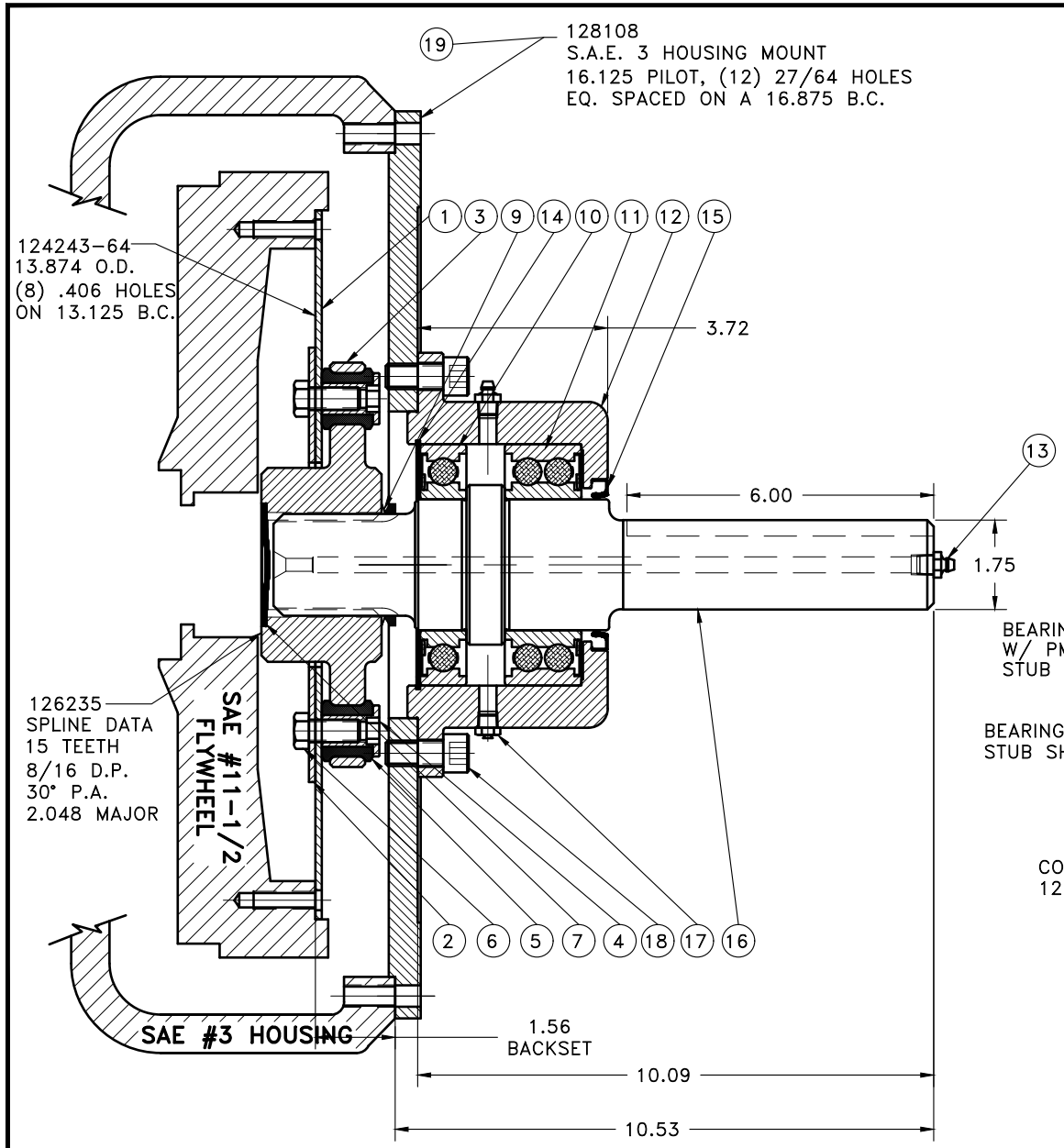


NOTES:

1. LIGHTLY GREASE INTERNAL AND EXTERNAL AREA OF SPLINE AT ASSEMBLY USING SUPPLIED COUPLING GREASE (OVER GREASING COULD CAUSE A HYDRAULIC TYPE LIFT ON SEALS).
2. **AT ASSEMBLY GREASE BEARING HOUSING UNTIL PIN EXTENDS FROM PRESSURE RELIEF VALVE (LOCATED 180° FROM GREASE ZERK).** USE OF AN UNLEADED EXTREME PRESSURE LITHIUM GREASE, WITH NLGI NO.2 GRADE IS RECOMMENDED. RUN TIME BETWEEN GREASINGS NOT TO EXCEED 2,000 HOURS.
3. WARNING!!! INJURY OR DEATH FROM A ROTATING STUB SHAFT CAN OCCUR IF A CONDITION EXISTS WHICH WOULD CAUSE THE SHAFT TO BREAK OR COME APART FROM ANY PART OF THE ASSEMBLY. DEPENDING UPON THE APPLICATION (FOR EXAMPLE, FAN, PULLEY, SHEAVE, ETC.), THE AREA AROUND THE STUB SHAFT MUST BE SUFFICIENTLY GUARDED SO THAT IN THE EVENT OF FAILURE, THE GUARD WILL CONTAIN ANY AIRBORNE PARTS.

ASSEMBLY NOTE:

ENSURE THAT THE GREASE ZERK AND RELIEF VALVE ARE LOCATED HORIZONTAL WHEN MOUNTING ON TO PUMP MOUNT PLATE OR HOUSING.

BEARING SUPPORTED W/ PMP STUB SHAFT SUB-ASS'Y

BEARING SUPPORTED STUB SHAFT SUB-ASS'Y

COUPLING ASS'Y 126236

| DET. | PART NUMBER | DESCRIPTION | QTY. |
|---|---|---|---|
| 19 | 128108 | PUMP MOUNT PLATE | 1 |
| 18 | BOLT | 1/2-13x1-1/8 SHCS D | 6 |
| 17 | 1093K11 | RELIEF VALVE | 1 |
| 16 | 132187 | SPLINED SHAFT | 1 |
| 15 | 25420 | SEAL | 1 |
| 14 | RR-472 | SPIROLOX RETAINER | 1 |
| 13 | 600000 | GREASE ZERK | 2 |
| 12 | 128105 | BEARING HOUSING | 1 |
| 11 | 5213 E/C3 | DOUBLE ROLLER BEARING | 1 |
| 10 | 213WDN | SINGLE ROLLER BEARING | 1 |
| 9 | 400500 | V-RING SEAL | 1 |
| 8 | 801912 | GREASE | 1 |
| 7 | R-0017-03 | GREASE PLUG | 1 |
| 6 | BOLT | 7/16-20x1 HHB Y D | 14 |
| 5 | H62500 | NEOPRENE INSERT | 14 |
| 4 | 123727 | THREADED BUSHING | 14 |
| 3 | 126235 | COUPLING HUB | 1 |
| 2 | 126234 | BACKING PLATE | 1 |
| 1 | 124243-64 | FLYWHEEL PLATE | 1 |

SYMBOLS: FLATNESS, STRAIGHTNESS, ANGULARITY, PERPENDICULARITY, PARALLELISM, CONCENTRICITY, TRUE POSITION, ROUNDNESS, CIRCULAR RUN OUT, TOTAL RUN OUT, CYLINDRICITY, FINISH

DO NOT SCALE DRAWING

TOLERANCES UNLESS OTHERWISE SPECIFIED
125 MAXIMUM
ANGLE ±1/2°
FRACTION ±1/32
DECIMAL
.00 ±.01
.000 ±.005
.0000 ±.0005

HAYES MANUFACTURING INC. ®

TITLE: BEARING SUPPORTED STUB SHAFT ASS'Y

MATERIAL

CLASS: BS ASSY

MAKE: [X] BUY: [ ]

DESCRIPTION: 11-1/2,3,1-3/4,5

DRAWN BY: BSL

DATE: 04-12-2016

CHECKED BY

SCALE

DRAWING NO. 132188

SHEET OF REV.

THIS DRAWING IS THE PROPERTY OF HAYES MFG. INC. AND IS LOANED SUBJECT TO THE CONDITION THAT IT SHALL NOT BE REPRODUCED, COPIED, LOANED OR OTHERWISE DISPOSED OF, DIRECTLY OR INDIRECTLY. IT SHALL BE USED AS A MEANS OF REFERENCE TO WORK FURNISHED BY THIS COMPANY ONLY AND IS NOT TO BE SUBMITTED TO OUTSIDE PARTIES FOR EXAMINATION WITHOUT OUR CONSENT.

COPYRIGHT ©2000-2017 by Hayes Manufacturing, Inc. All rights reserved.