REV	DATE	CHANGE DESCRIPTION	MOD.BY	CK1	CK2

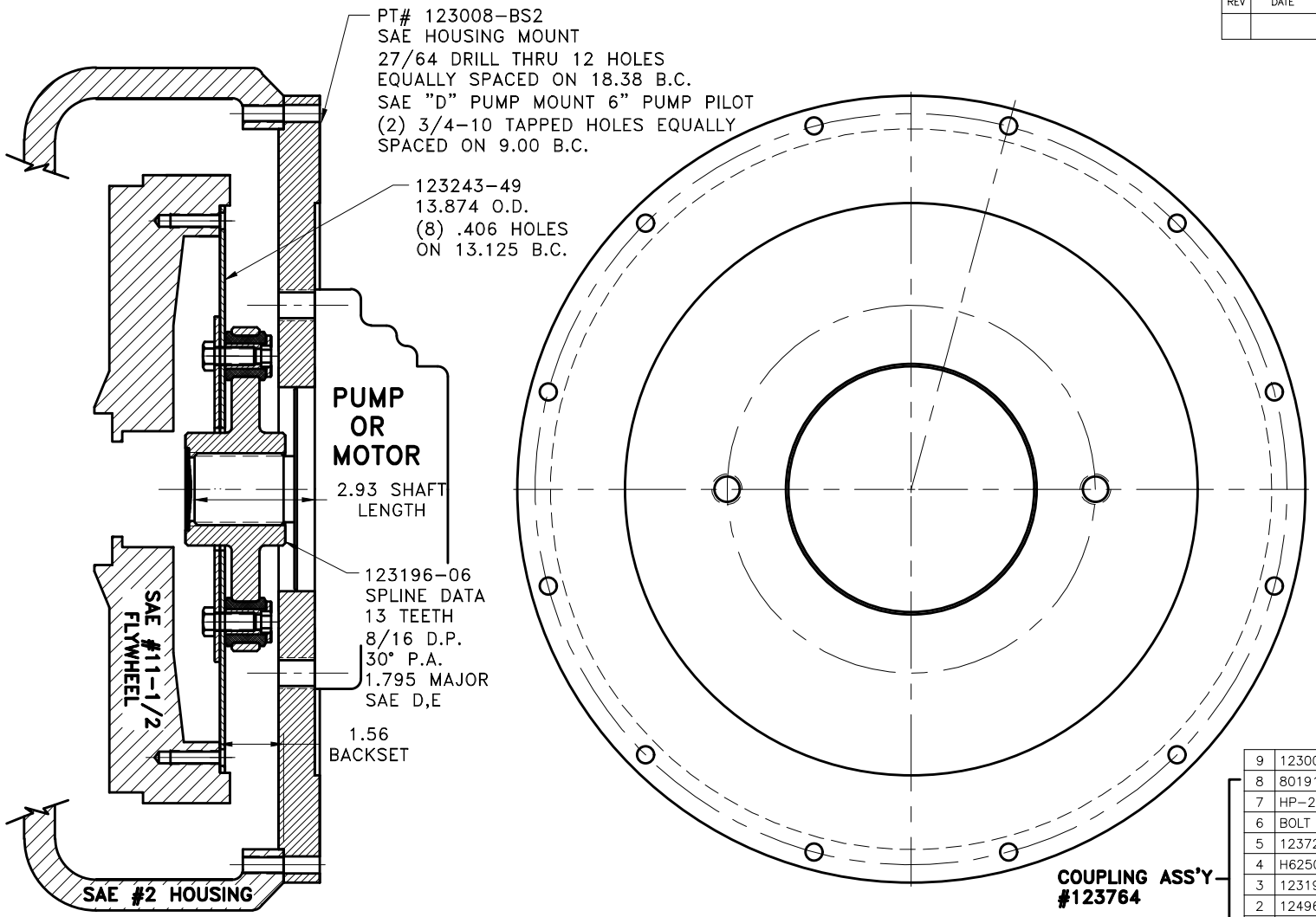

UP TO 350 HP

9	123008-BS2	PUMP MOUNT PLATE	1
8	801912	GREASE	1
7	HP-2000-S-62	HUBBARD PLUG	1
6	BOLT	7/16-20x1 HHB Y D	12
5	123727	THREADED BUSHING	12
4	H62500	NEOPRENE INSERT	12
3	123196-06	COUPLING HUB	1
2	124961-02	BACKING PLATE	1
1	123243-49	FLYWHEEL PLATE	1

COUPLING ASS'Y
#123764

SYMBOLS
FLATNESS
STRAIGHTNESS
ANGULARITY
PERPENDICULARITY
PARALLELISM
CONCENTRICITY
TRUE POSITION
ROUNDNESS
CIRCULAR RUN OUT
TOTAL RUN OUT
CYLINDRICITY
FINISH

DET. | PART NUMBER | DESCRIPTION | QTY.

DO NOT SCALE DRAWING
TOLERANCES UNLESS OTHERWISE SPECIFIED
125 MAXIMUM
ANGLE ±1/2°
FRACTION ±1/32
DECIMAL
.00 ±.01
.000 ±.005
.0000 ±.0005

HAYES MANUFACTURING INC. ®

TITLE FLYWHEEL COUPLING ASS'Y

MATERIAL

CLASS | MAKE: ☐ BUY: ☐

DRAWN BY LAWSON | DATE 7-12-2016 | DRAWING NO. 132294

DESCRIPTION | CHECKED BY | SCALE | SHEET OF REV.

THIS DRAWING IS THE PROPERTY OF HAYES MFG. INC. AND IS LOANED SUBJECT TO THE CONDITION THAT IT SHALL NOT BE REPRODUCED, COPIED, LOANED OR OTHERWISE DISPOSED OF, DIRECTLY OR INDIRECTLY. IT SHALL BE USED AS A MEANS OF REFERENCE TO WORK FURNISHED BY THIS COMPANY ONLY AND IS NOT TO BE SUBMITTED TO OUTSIDE PARTIES FOR EXAMINATION WITHOUT OUR CONSENT.

COPYRIGHT ©2000-2017 by Hayes Manufacturing, Inc. All rights reserved.