REV	DATE	CHANGE DESCRIPTION	MOD.BY	CK1	CK2
C	05/20/2010	CHANGED TO 1011 WOODRUFF KEY	ZS	RJH	

NOTES:

1. WARNING!!! INJURY OR DEATH FROM A ROTATING STUB SHAFT CAN OCCUR IF A CONDITION EXISTS WHICH WOULD CAUSE THE SHAFT TO BREAK OR COME APART FROM ANY PART OF THE ASSEMBLY. DEPENDING UPON THE APPLICATION (FOR EXAMPLE, FAN, PULLEY, SHEAVE, ETC.), THE AREA AROUND THE STUB SHAFT MUST BE SUFFICIENTLY GUARDED SO THAT IN THE EVENT OF FAILURE, THE GUARD WILL CONTAIN ANY AIRBORNE PARTS.

ASSEMBLY NOTE:

MUST USE DOUBLE SEALED BEARINGS.

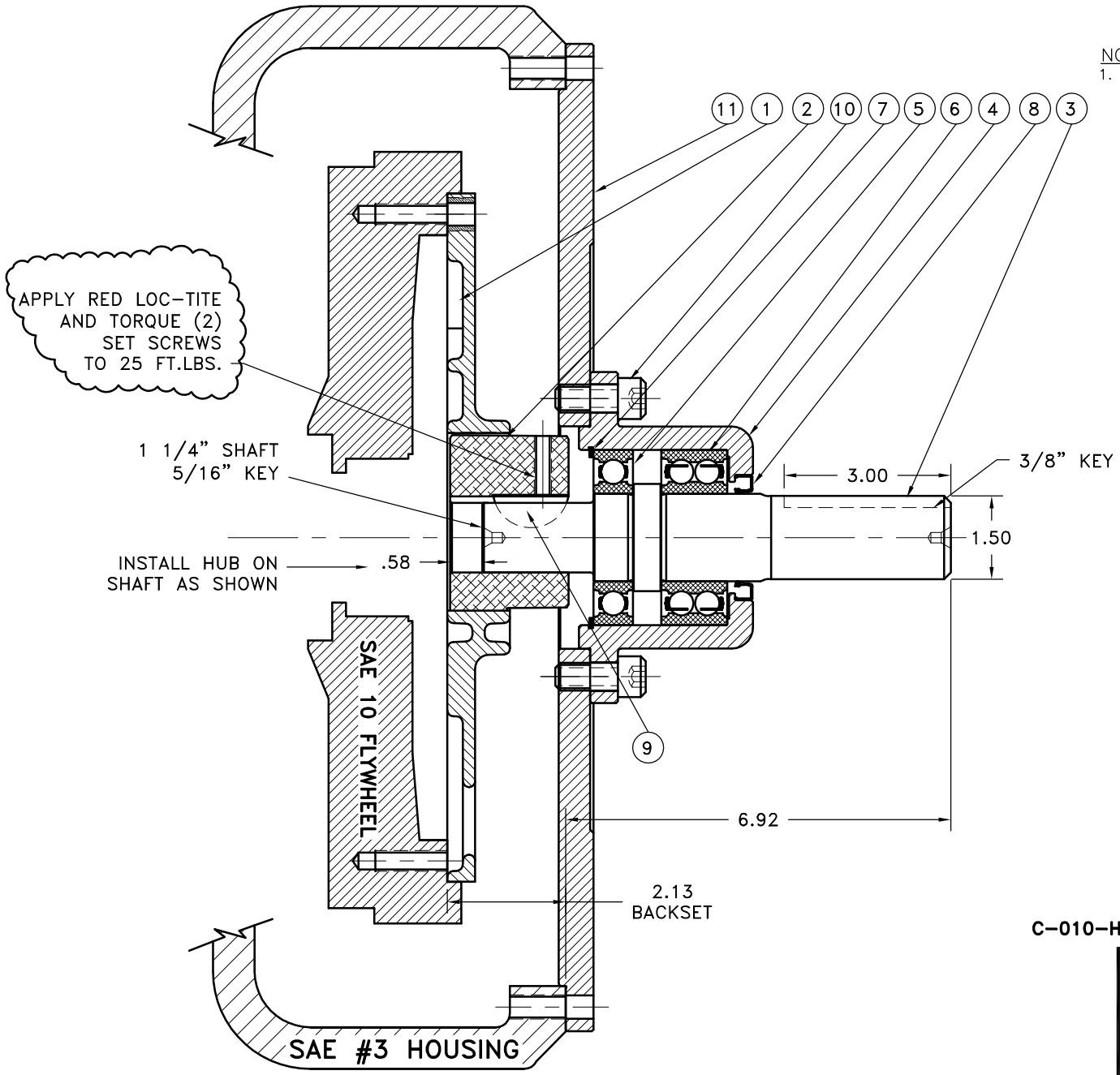

HUB/SHAFT ORIENTATION

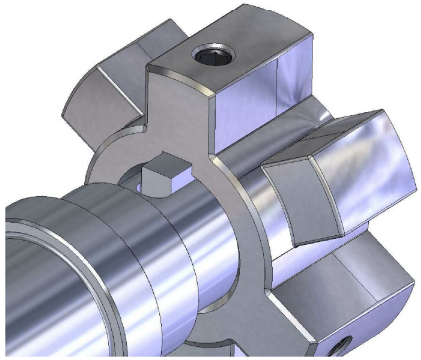

	11	123008-DO4	PUMP MOUNT PLATE [3\B4BOLT]	1
	10	740000	1/2-13 SHCS	4
	9	23-1011	1 3/8 x 5/16 WOODRUFF KEY	1
	8	CRW1R15830	SEAL	1
	7	RR-314	SPIROLOX RETAINING RING	1
	6	5208-2RS	DOUBLE BEARING	1
	5	6208-2RS	BEARING	1
150-S	4	128498	BEARING HOUSING	1
	3	150000-01	STUB SHAFT	1
C-010-HC4-43	2	HC4-43	HEX~FLX HUB	1
	1	C-010	HEX~FLX DRIVE PLATE	1

SYMBOLS: FLATNESS, STRAIGHTNESS, ANGULARITY, PERPENDICULARITY, PARALLELISM, CONCENTRICITY, TRUE POSITION, ROUNDNESS, CIRCULAR RUN OUT, TOTAL RUN OUT, CYLINDRICITY, FINISH

DET. | PART NUMBER | DESCRIPTION | QTY.

DO NOT SCALE DRAWING

TOLERANCES UNLESS OTHERWISE SPECIFIED
125 MAXIMUM
ANGLE ±1/2°
FRACTION ±1/32
DECIMAL
.00 ±.01
.000 ±.005
.0000 ±.0005

HAYES MANUFACTURING INC. ®

TITLE: BEARING SUPPORTED STUB SHAFT ASS'Y

MATERIAL

CLASS | MAKE: ☐ BUY: ☐ | DRAWN BY: LAWSON | DATE: 9-13-05 | DRAWING NO. 150-010-03-S

DESCRIPTION | CHECKED BY: RJH | SCALE | SHEET OF REV.

THIS DRAWING IS THE PROPERTY OF HAYES MFG. INC. AND IS LOANED SUBJECT TO THE CONDITION THAT IT SHALL NOT BE REPRODUCED, COPIED, LOANED OR OTHERWISE DISPOSED OF, DIRECTLY OR INDIRECTLY. IT SHALL BE USED AS A MEANS OF REFERENCE TO WORK FURNISHED BY THIS COMPANY ONLY AND IS NOT TO BE SUBMITTED TO OUTSIDE PARTIES FOR EXAMINATION WITHOUT OUR CONSENT.

COPYRIGHT ©2000-2014 by Hayes Manufacturing, Inc. All rights reserved.

4/16/2014 10:59:32 AM