REV	DATE	CHANGE DESCRIPTION	MOD.BY	CK1	CK2

SPECIAL FOR DF972 – WG972

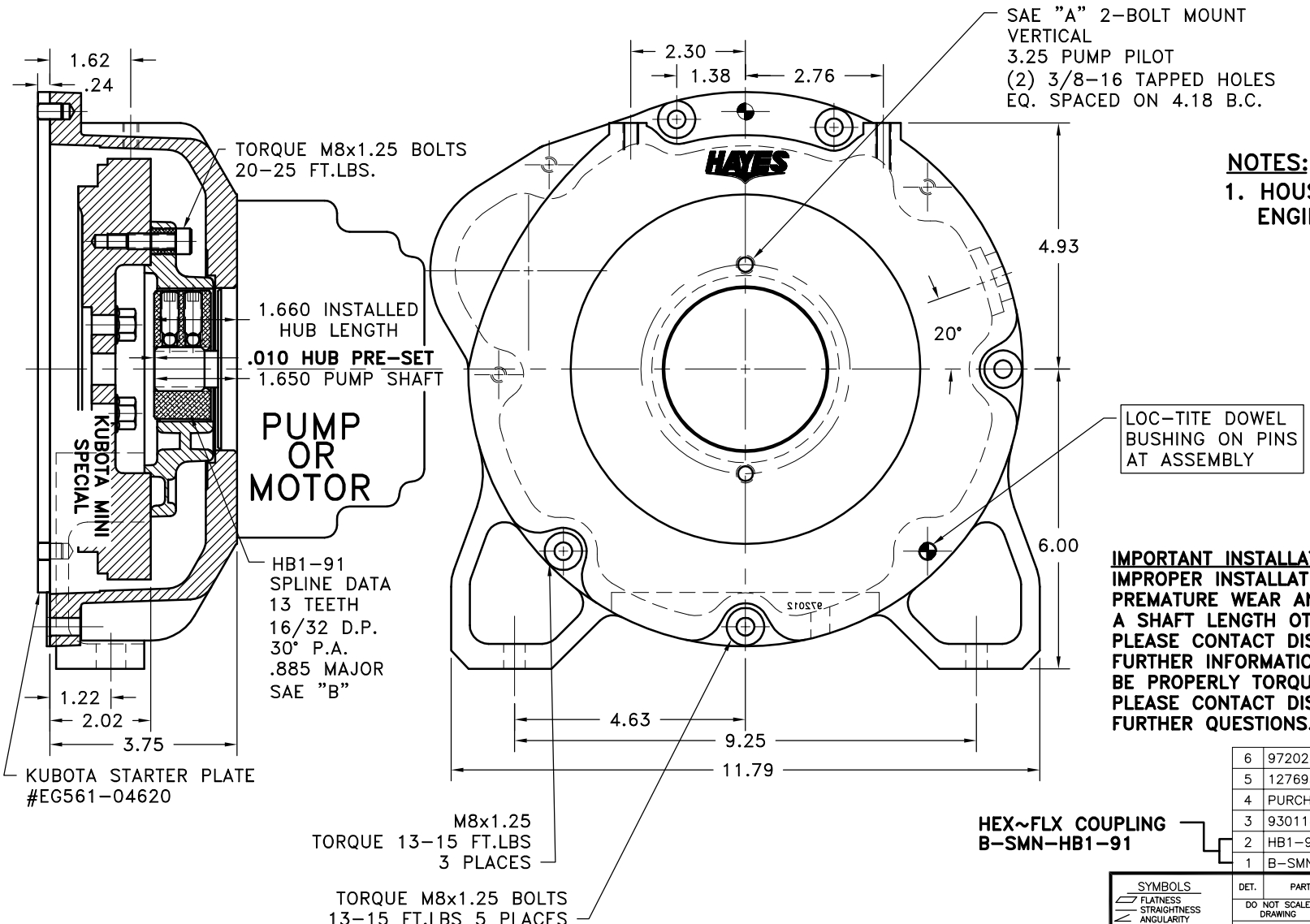

NOTES:

1. HOUSING FOR KUBOTA ENGINES DF972 – WG972.

IMPORTANT INSTALLATION NOTE!!!!!

IMPROPER INSTALLATION OF HUB COULD CAUSE PREMATURE WEAR AND OR FAILURE. IF YOU HAVE A SHAFT LENGTH OTHER THAN THOSE SHOWN HERE PLEASE CONTACT DISTRIBUTOR OR FACTORY FOR FURTHER INFORMATION. HUB SET SCREWS MUST BE PROPERLY TORQUED TO 20 FT.LBS. EACH. PLEASE CONTACT DISTRIBUTOR OR FACTORY FOR ANY FURTHER QUESTIONS.

HEX~FLX COUPLING
B–SMN–HB1–91

DET.	PART NUMBER	DESCRIPTION	QTY.
6	972024	BOLT KIT	1
5	127695	HOLLOW DOWEL BUSHING	1
4	PURCHASE	5/16 DIA x 1/2 DOWEL PIN	2
3	930114–13	HOUSING	1
2	HB1–91	HEX~FLX HUB	1
1	B–SMN	HEX~FLX DRIVE PLATE	1

SYMBOLS
FLATNESS
STRAIGHTNESS
ANGULARITY
SQUARENESS
PARALLELISM
CONCENTRICITY
TRUE POSITION
ROUNDNESS
CIRCULAR RUN OUT
TOTAL RUN OUT
CYLINDRICITY
FINISH

DO NOT SCALE DRAWING
TOLERANCES UNLESS OTHERWISE SPECIFIED
125 MAXIMUM
ANGLE ±1/2°
FRACTION ±1/32
DECIMAL
.00 ±.01
.000 ±.005
.0000 ±.0005

– UNLESS OTHERWISE SPECIFIED –
REMOVE FIRST THREAD ON ALL TAPPED HOLES
BREAK ALL SHARP CORNERS .010 TO .020
STAMP OR MARK DRAWING NO.

HAYES MANUFACTURING INC. ®

TITLE: KUBOTA MINI HEX~FLX ASS'Y

MATERIAL

DRAWN BY	DATE	DRAWING NO.
SIETING	05–02–06	003-0-HB1-91-A2V
CHECKED BY	SCALE	SHEET OF REV.
RJH		

THIS DRAWING IS THE PROPERTY OF HAYES MFG. INC. AND IS LOANED SUBJECT TO THE CONDITION THAT IT SHALL NOT BE REPRODUCED, COPIED, LOANED OR OTHERWISE DISPOSED OF, DIRECTLY OR INDIRECTLY. IT SHALL BE USED AS A MEANS OF REFERENCE TO WORK FURNISHED BY THIS COMPANY ONLY AND IS NOT TO BE SUBMITTED TO OUTSIDE PARTIES FOR EXAMINATION WITHOUT OUR CONSENT.

COPYRIGHT ©2000–2007 by Hayes Manufacturing, Inc. All rights reserved.

4/19/2007 3:35:48 PM