REV	DATE	CHANGE DESCRIPTION	MOD.BY	CK1	CK2

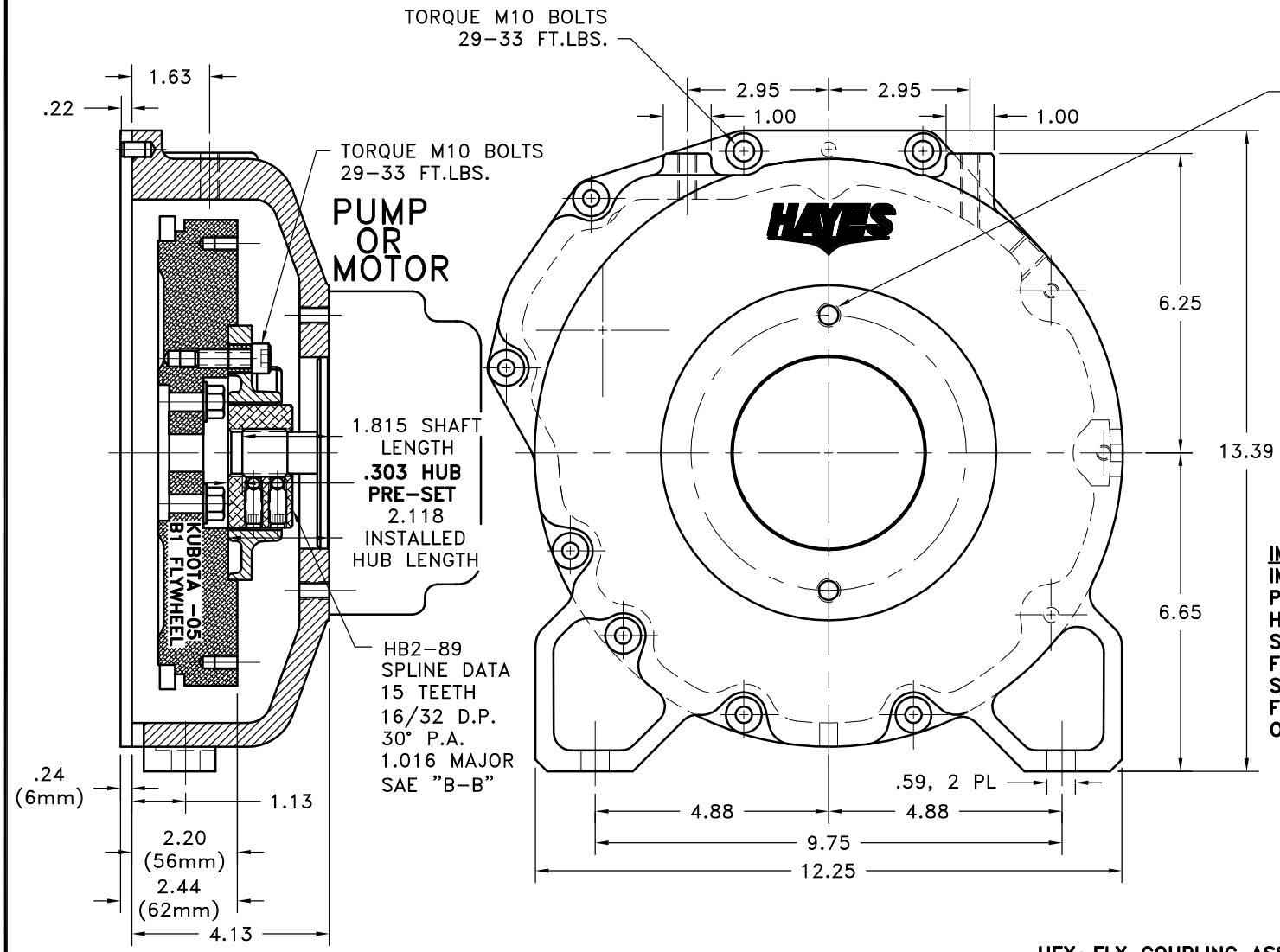

S.A.E. B 2–BOLT MOUNT VERTICAL
4.00" PILOT
(2) 1/2–13 TAPPED HOLES
EQ. SPACED ON A 5.75 B.C.

NOTES:

1. HOUSING FOR KUBOTA ENGINES D–905, D1005–B, D1105–B, V1205–B, V1305–P, AND V1505–B.

IMPORTANT INSTALLATION NOTE!!!!!
IMPROPER INSTALLATION OF HUB COULD CAUSE PREMATURE WEAR AND OR FAILURE. IF YOU HAVE A SHAFT LENGTH OTHER THAN THOSE SHOWN HERE PLEASE CONTACT DISTRIBUTOR OR FACTORY FOR FURTHER INFORMATION. HUB SET SCREWS MUST BE PROPERLY TORQUED TO 20 FT.LBS. EACH. PLEASE CONTACT DISTRIBUTOR OR FACTORY FOR ANY FURTHER QUESTIONS.

HEX~FLX COUPLING ASS'Y
B–S05–HB2–89

DET.	PART NUMBER	DESCRIPTION	QTY.
10	952182	BOLT KIT	1
9	PURCHASE	5/16 DIA x 1/2 DOWEL PIN	2
8	952088–12	HOUSING	1
2	HB2–89	HEX~FLX HUB	1
1	B–S05	HEX~FLX DRIVE PLATE	1

SYMBOLS
FLATNESS
STRAIGHTNESS
ANGULARITY
SQUARENESS
PARALLELISM
CONCENTRICITY
TRUE POSITION
ROUNDNESS
CIRCULAR RUN OUT
TOTAL RUN OUT
CYLINDRICITY
FINISH

DO NOT SCALE DRAWING
TOLERANCES UNLESS OTHERWISE SPECIFIED
125 MAXIMUM
ANGLE ±1/2°
FRACTION ±1/32
DECIMAL
.00 ±.01
.000 ±.005
.0000 ±.0005

HAYES MANUFACTURING INC. ®

TITLE KUBOTA -05 HEX~FLX ASS'Y

MATERIAL

– UNLESS OTHERWISE SPECIFIED –
REMOVE FIRST THREAD ON ALL TAPPED HOLES
BREAK ALL SHARP CORNERS .010 TO .020
STAMP OR MARK DRAWING NO.

DRAWN BY	DATE	DRAWING NO.
SIETING	01–19–06	005-S-HB2-89-B2V
CHECKED BY RJH	SCALE	SHEET OF REV.

THIS DRAWING IS THE PROPERTY OF HAYES MFG. INC. AND IS LOANED SUBJECT TO THE CONDITION THAT IT SHALL NOT BE REPRODUCED, COPIED, LOANED OR OTHERWISE DISPOSED OF, DIRECTLY OR INDIRECTLY. IT SHALL BE USED AS A MEANS OF REFERENCE TO WORK FURNISHED BY THIS COMPANY ONLY AND IS NOT TO BE SUBMITTED TO OUTSIDE PARTIES FOR EXAMINATION WITHOUT OUR CONSENT.

COPYRIGHT ©2000–2006 by Hayes Manufacturing, Inc.

12/6/2006 12:29:29 PM