REV	DATE	CHANGE DESCRIPTION	MOD.BY	CK1	CK2

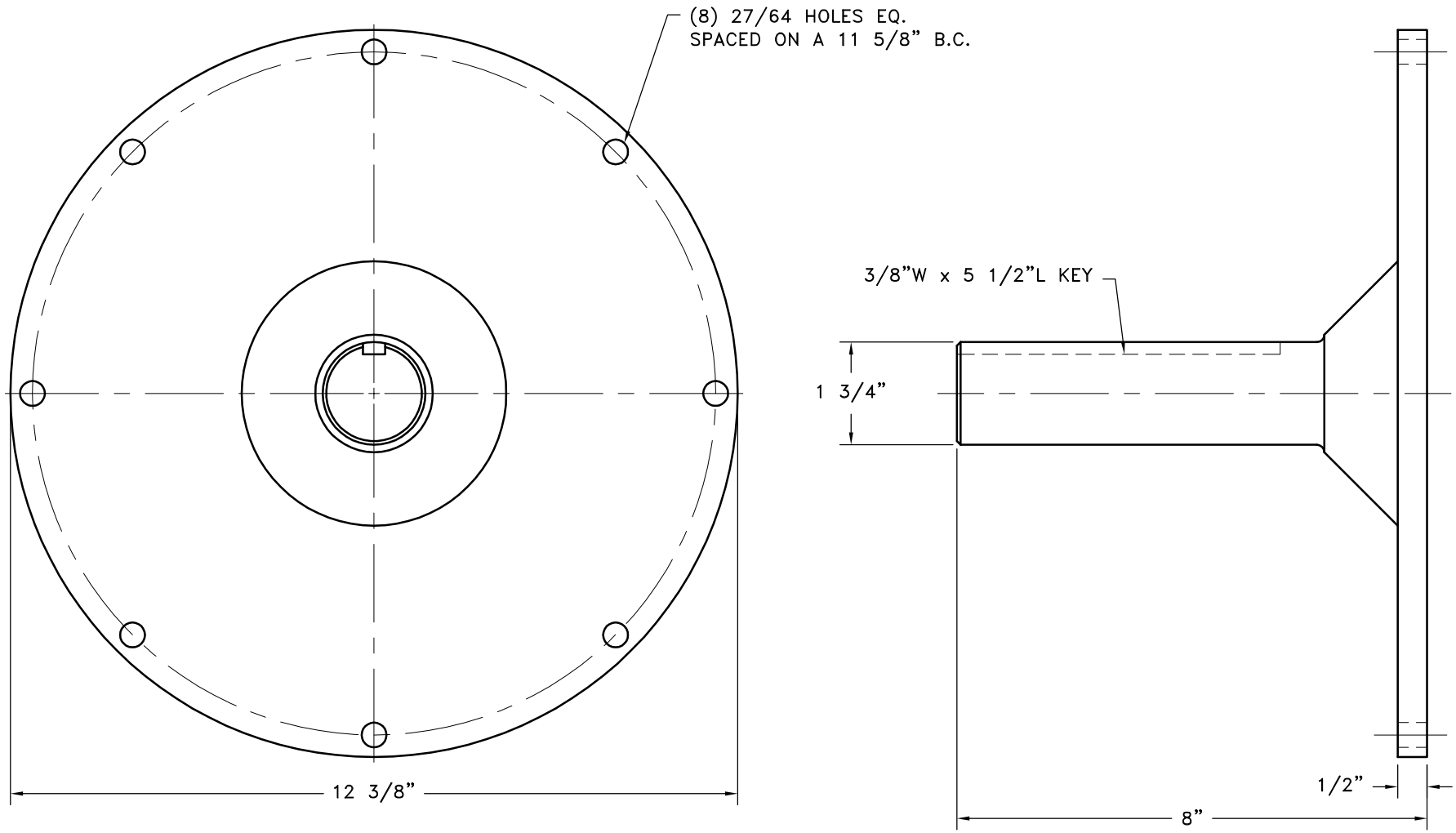

S.A.E. 10 STUB SHAFT

SYMBOLS	DET.	PART NUMBER	DESCRIPTION	QTY.
FLATNESS STRAIGHTNESS ANGULARITY SQUARENESS PARALLELISM CONCENTRICITY TRUE POSITION ROUNDNESS CIRCULAR RUN OUT TOTAL RUN OUT CYLINDRICITY FINISH	DO NOT SCALE DRAWING TOLERANCES UNLESS OTHERWISE SPECIFIED 125 MAXIMUM ANGLE ±1/2° FRACTION ±1/32 DECIMAL .00 ±.01 .000 ±.005 .0000 ±.0005	HAYES MANUFACTURING INC. ® TITLE S.A.E. 10 STUB SHAFT MATERIAL		
– UNLESS OTHERWISE SPECIFIED – REMOVE FIRST THREAD ON ALL TAPPED HOLES BREAK ALL SHARP CORNERS .010 TO .020 STAMP OR MARK DRAWING NO.	DRAWN BY SIETING CHECKED BY RJH	DATE 06–22–06 SCALE	DRAWING NO. 26-02B54 SHEET OF REV.	

THIS DRAWING IS THE PROPERTY OF HAYES MFG. INC. AND IS LOANED SUBJECT TO THE CONDITION THAT IT SHALL NOT BE REPRODUCED, COPIED, LOANED OR OTHERWISE DISPOSED OF, DIRECTLY OR INDIRECTLY. IT SHALL BE USED AS A MEANS OF REFERENCE TO WORK FURNISHED BY THIS COMPANY ONLY AND IS NOT TO BE SUBMITTED TO OUTSIDE PARTIES FOR EXAMINATION WITHOUT OUR CONSENT.

COPYRIGHT ©2000–2007 by Hayes Manufacturing, Inc.