SYM.	DATE	CHANGE DESCRIPTION	DWN.
A	11/94	ADDED P/N TO R/H STARTER	RH

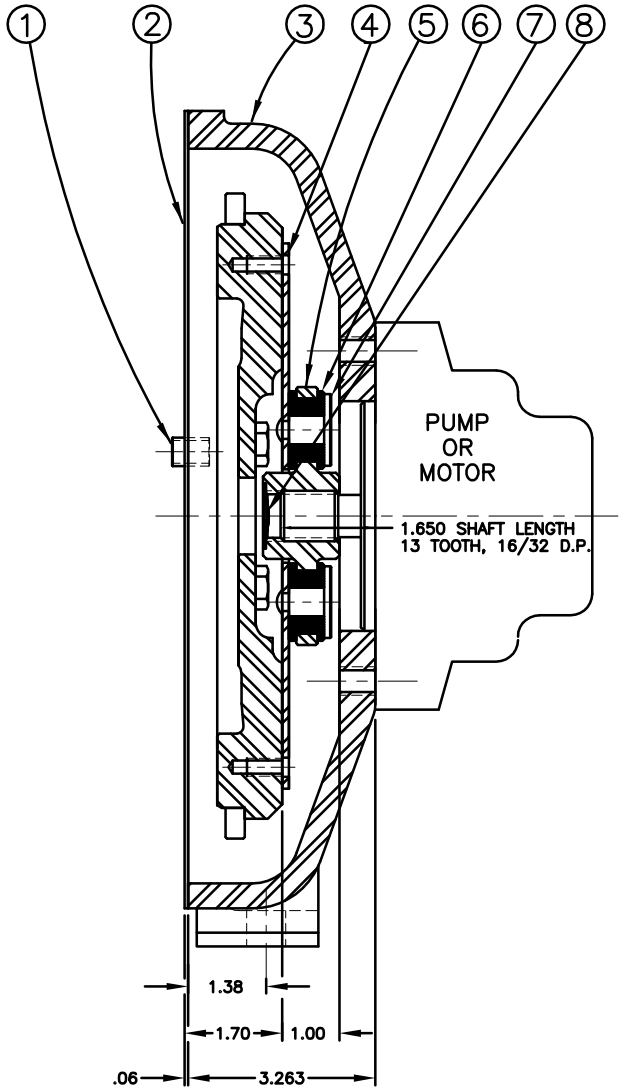

SECTION A~A

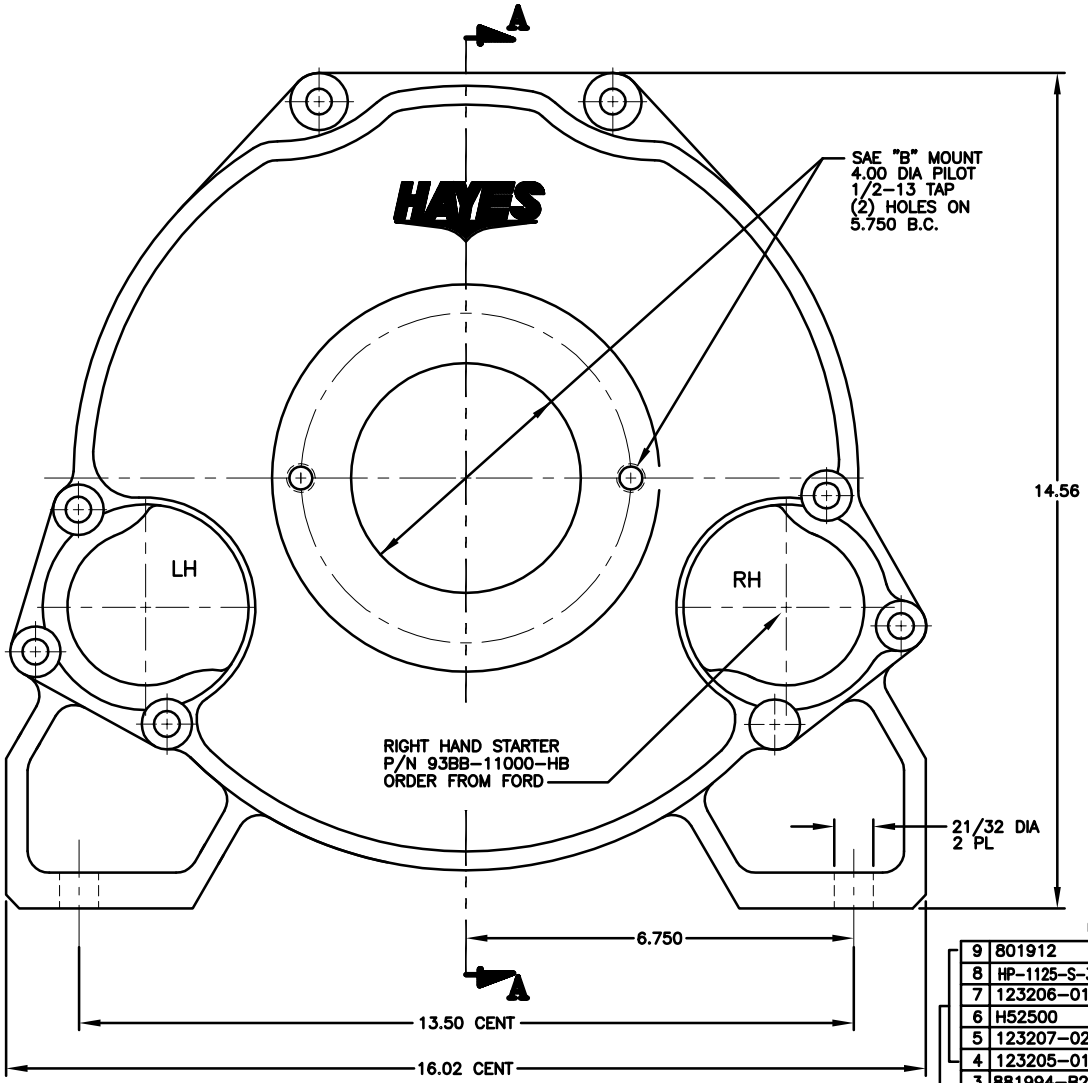

UP TO 50 H.P.

DET.	PART NUMBER	DESCRIPTION	QTY.
9	801912	GREASE	1
8	HP-1125-S-32	HUBBARD PLUG	1
7	123206-01	STEEL RIVET	6
6	H52500	NEOPRENE INSERT	6
5	123207-02	COUPLING HUB	1
4	123205-01	FLYWHEEL PLATE	1
3	881994-B2	ENGINE HOUSING	1
2	855136-RH	STARTER PLATE	1
1	70HM-6397-AA	DOWEL BUSHING	2

COUPLING ASS'Y 123340-13

ORDER FROM FORD

NOTE:

1. HOUSING WILL FIT FORD ENGINE VSG-413, 4 CYLINDER, 1.3 LITER, (79 CID)
2. USE FURNISHED TEXACO 1912 COUPLING GREASE ON BOTH MALE AND FEMALE SPLINE.
3. CAUTION: WHEN INSTALLING PUMP ON ENGINE HOUSING BE CAREFUL BOLTS DO NOT EXTEND PAST INSIDE FACE OF HOUSING AND RUB ON COUPLING ASSEMBLY.

SYMBOLS: FLATNESS, STRAIGHTNESS, ANGULARITY, SQUARENESS, PARALLELISM, CONCENTRICITY, TRUE POSITION, SYMMETRY, LOC. SURFACE, ROUNDNESS, RUN OUT, FINISH

DO NOT SCALE DRAWING

TOLERANCES UNLESS OTHERWISE SPECIFIED: ANGLE ±1/2°, FRACTION ±1/32, DECIMAL .03 ±.010, .020 ±.005, .000 ±.0005

– UNLESS OTHERWISE SPECIFIED – REMOVE FINE THREAD ON ALL TAPPED HOLES. BREAK ALL SHARP CORNERS .010 TO .020. STAMP OR MARK DRAWING NO.

HAYES MANUFACTURING INC.

TITLE: HOUSING & COUPLING ASS'Y

MATERIAL:

DRAWN BY: LANNEN | DATE: 3-30-94 | DRAWING NO. 866706

CHECKED BY: | SCALE: FULL | SHEET OF REV.

THIS DRAWING IS THE PROPERTY OF HAYES MFG. INC. AND IS LOANED SUBJECT TO THE CONDITION THAT IT SHALL NOT BE REPRODUCED, COPIED, LOANED OR OTHERWISE DISPOSED OF, DIRECTLY OR INDIRECTLY. IT SHALL BE USED AS A MEANS OF REFERENCE TO WORK FURNISHED BY THIS COMPANY ONLY AND IS NOT TO BE SUBMITTED TO OUTSIDE PARTIES FOR EXAMINATION WITHOUT OUR CONSENT.