| SYM. | DATE | CHANGED DESCRIPTION | DWN. |
|---|---|---|---|
| | | | |
| | | | |

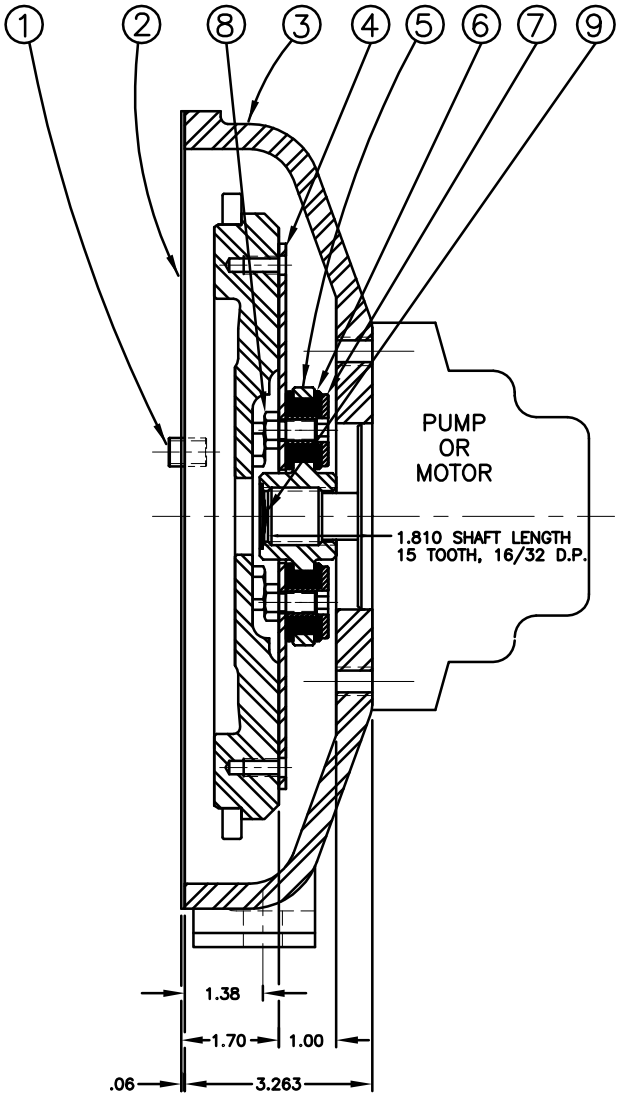


**SECTION A~A**

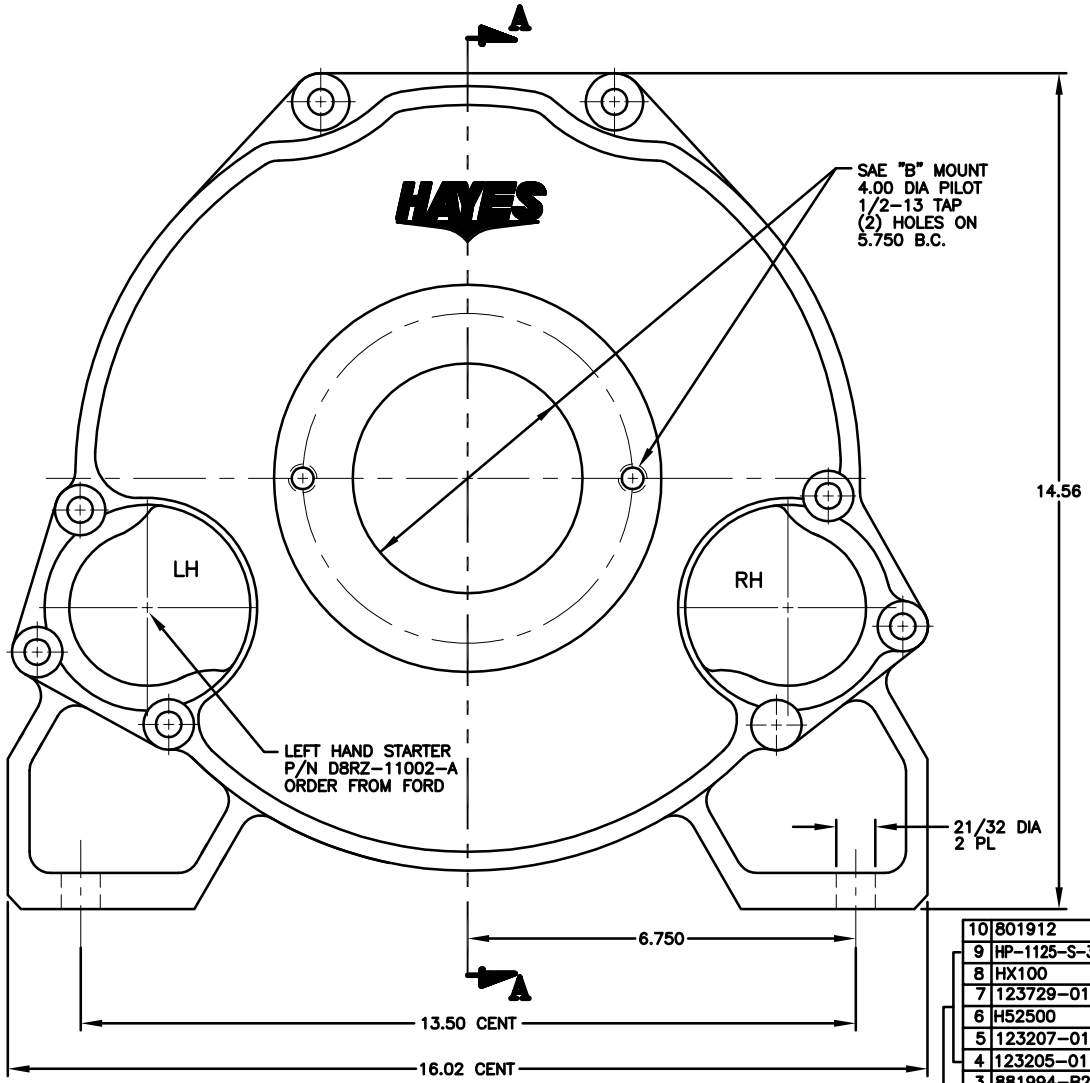


UP TO 50 H.P.

| DET. | PART NUMBER | DESCRIPTION | QTY. |
|---|---|---|---|
| 10 | 801912 | GREASE | 1 |
| 9 | HP-1125-S-32 | HUBBARD PLUG | 1 |
| 8 | HX100 | 5/16-24-5/8 BOLT | 6 |
| 7 | 123729-01 | THREADED BUSHING | 6 |
| 6 | H52500 | NEOPRENE INSERT | 6 |
| 5 | 123207-01 | COUPLING HUB | 1 |
| 4 | 123205-01 | FLYWHEEL PLATE | 1 |
| 3 | 881994-B2 | ENGINE HOUSING | 1 |
| 2 | 855265-LH | STARTER PLATE | 1 |
| 1 | 70HM-6397-AA | DOWEL BUSHING | 2 |

COUPLING ASS'Y #124499

ORDER FROM FORD

NOTE:

1. HOUSING WILL FIT FORD ENGINE VSG-413, 4 CYLINDER, 1.3 LITER, (79 CID)
2. USE FURNISHED TEXACO 1912 COUPLING GREASE ON BOTH MALE AND FEMALE SPLINE.
3. CAUTION: WHEN INSTALLING PUMP ON ENGINE HOUSING BE CAREFUL BOLTS DO NOT EXTEND PAST INSIDE FACE OF HOUSING AND RUB ON COUPLING ASSEMBLY.

SYMBOLS: FLATNESS, STRAIGHTNESS, ANGULARITY, ROUNDNESS, PARALLELISM, CONCENTRICITY, TRUE POSITION, SYMMETRY, LOC. SURFACE, ROUNDNESS, RUN OUT, FINISH

DO NOT SCALE DRAWING

TOLERANCES UNLESS OTHERWISE SPECIFIED: ANGLE ±1/2°; FRACTION ±1/32; DECIMAL .X ±.010, .XX ±.005, .XXX ±.0005

HAYES MANUFACTURING INC.

TITLE: HOUSING & COUPLING ASS'Y

MATERIAL:

– UNLESS OTHERWISE SPECIFIED –
REMOVE FREE THREAD ON ALL TAPPED HOLES
BREAK ALL SHARP CORNERS .010 TO .020
STAMP OR MARK DRAWING NO.

DRAWN BY: HAVEMAN
CHECKED BY:
DATE: 6-10-96
SCALE: FULL
DRAWING NO. 866730
SHEET OF REV.

THIS DRAWING IS THE PROPERTY OF HAYES MFG. INC. AND IS LOANED SUBJECT TO THE CONDITION THAT IT SHALL NOT BE REPRODUCED, COPIED, LOANED OR OTHERWISE DISPOSED OF, DIRECTLY OR INDIRECTLY. IT SHALL BE USED AS A MEANS OF REFERENCE TO WORK FURNISHED BY THIS COMPANY ONLY AND IS NOT TO BE SUBMITTED TO OUTSIDE PARTIES FOR EXAMINATION WITHOUT OUR CONSENT.