REV	DATE	CHANGE DESCRIPTION	MOD.BY	CK1	CK2

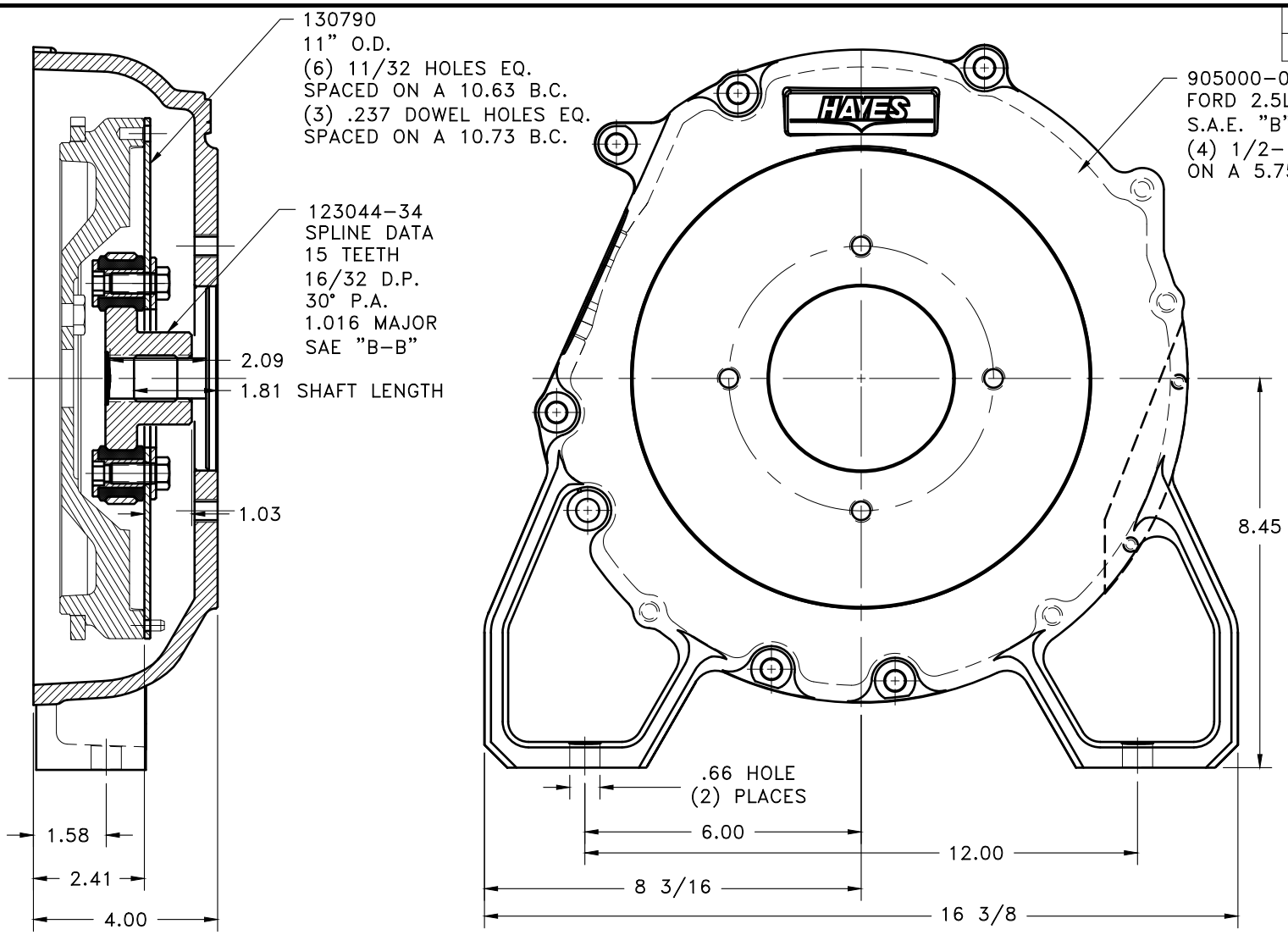

DET.	PART NUMBER	DESCRIPTION	QTY.
10	905002	BOLT KIT (PRE-ASSEMBLED)	1
9	905000-04	HOUSING	1
8	801912	GREASE	1
7	HP-1125-S-32	GREASE PLUG	1
6	123727	THREADED BUSHING	6
5	BOLT	7/16-20x1 HHB Y D	6
4	H62500	NEOPRENE INSERT	6
3	123044-34	COUPLING HUB	1
2	124623	BACKING PLATE	1
1	130790	FLYWHEEL PLATE	1

COUPLING ASS'Y #131xxx

FORD 2.5L

SYMBOLS
- FLATNESS
- STRAIGHTNESS
- ANGULARITY
- PERPENDICULARITY
- PARALLELISM
- CONCENTRICITY
- TRUE POSITION
- ROUNDNESS
- CIRCULAR RUN OUT
- TOTAL RUN OUT
- CYLINDRICITY
- FINISH

DO NOT SCALE DRAWING

TOLERANCES UNLESS OTHERWISE SPECIFIED
125 MAXIMUM
ANGLE ±1/2°
FRACTION ±1/32
DECIMAL
.00 ±.01
.000 ±.005
.0000 ±.0005

HAYES MANUFACTURING INC. ®

TITLE: FORD 2.5L STUB SHAFT ASSEMBLY

MATERIAL

CLASS

MAKE: ☐ BUY: ☐

DESCRIPTION

DRAWN BY	DATE	DRAWING NO.
SIETING	08-24-2012	905025
CHECKED BY	SCALE	SHEET OF REV.
RJH		

THIS DRAWING IS THE PROPERTY OF HAYES MFG. INC. AND IS LOANED SUBJECT TO THE CONDITION THAT IT SHALL NOT BE REPRODUCED, COPIED, LOANED OR OTHERWISE DISPOSED OF, DIRECTLY OR INDIRECTLY. IT SHALL BE USED AS A MEANS OF REFERENCE TO WORK FURNISHED BY THIS COMPANY ONLY AND IS NOT TO BE SUBMITTED TO OUTSIDE PARTIES FOR EXAMINATION WITHOUT OUR CONSENT.

COPYRIGHT ©2000-2017 by Hayes Manufacturing, Inc. All rights reserved.