| REV | DATE | CHANGE DESCRIPTION | MOD.BY | CK1 | CK2 |
|---|---|---|---|---|---|
| | | | | | |

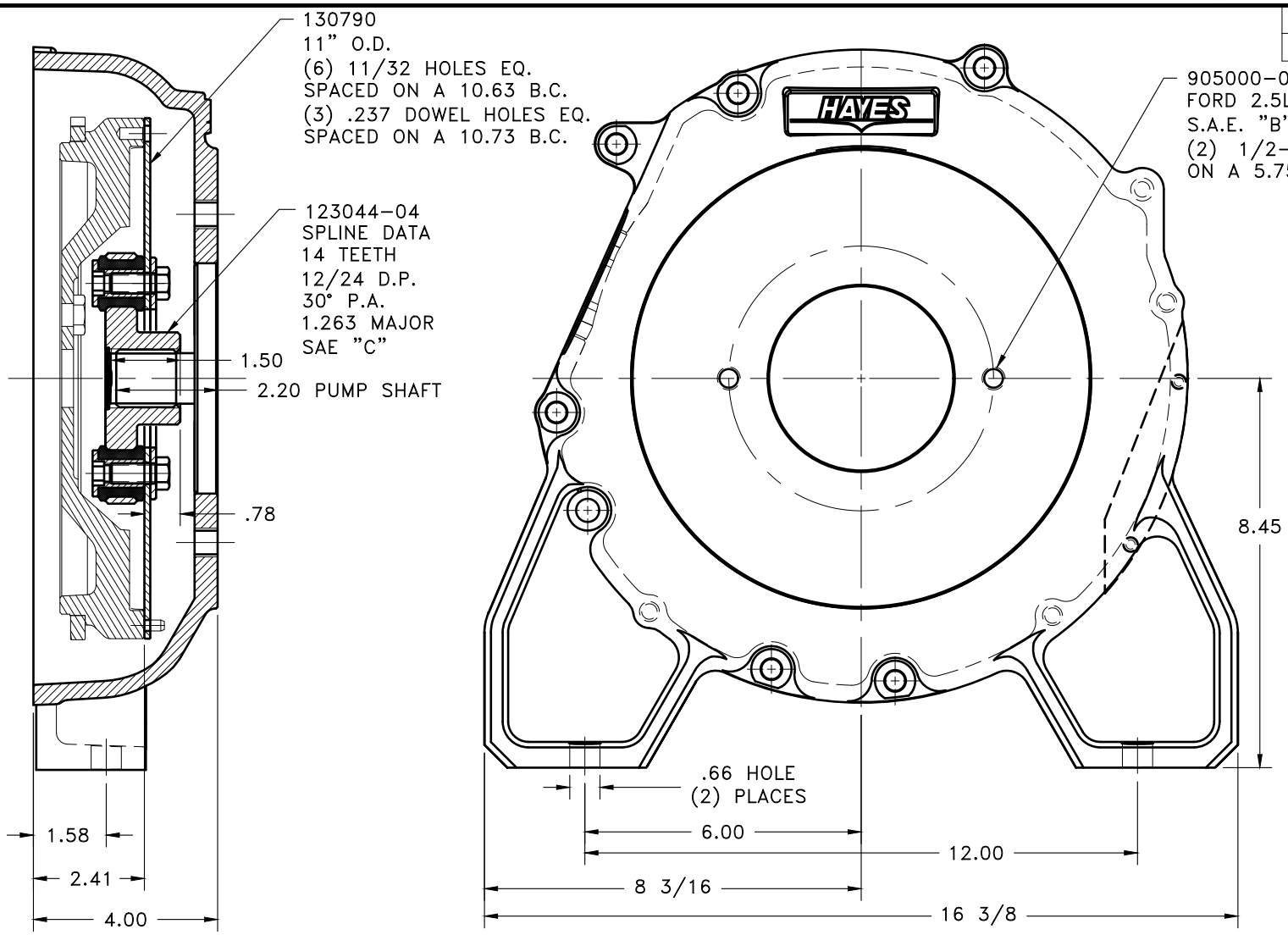


| | DET. | PART NUMBER | DESCRIPTION | QTY. |
|---|---|---|---|---|
| | 10 | 905002 | BOLT KIT (PRE-ASSEMBLED) | 1 |
| | 9 | 905000-01 | HOUSING | 1 |
| COUPLING ASS'Y | 8 | 801912 | GREASE | 1 |
| | 7 | HP-1312-S-62 | GREASE PLUG | 1 |
| | 6 | 123727 | THREADED BUSHING | 6 |
| | 5 | HX200 | 7/16-20x1 HHB Y D | 6 |
| | 4 | H62500 | NEOPRENE INSERT | 6 |
| | 3 | 123044-04 | COUPLING HUB | 1 |
| | 2 | 124623 | BACKING PLATE | 1 |
| | 1 | 130790 | FLYWHEEL PLATE | 1 |

# FORD 2.5L

SYMBOLS
FLATNESS
STRAIGHTNESS
ANGULARITY
PERPENDICULARITY
PARALLELISM
CONCENTRICITY
TRUE POSITION
ROUNDNESS
CIRCULAR RUN OUT
TOTAL RUN OUT
CYLINDRICITY
FINISH

DO NOT SCALE DRAWING
TOLERANCES UNLESS OTHERWISE SPECIFIED
125 MAXIMUM
ANGLE ±1/2°
FRACTION ±1/32
DECIMAL
.00 ±.01
.000 ±.005
.0000 ±.0005

HAYES MANUFACTURING INC. ®

TITLE
FORD 2.5L STUB SHAFT ASSEMBLY

MATERIAL

CLASS
MAKE: ☐ BUY: ☐
DESCRIPTION

| DRAWN BY | DATE | DRAWING NO. |
|---|---|---|
| LAWSON | 12-18-2017 | 905032 |
| CHECKED BY | SCALE | SHEET OF REV. |
| RJH | | |

THIS DRAWING IS THE PROPERTY OF HAYES MFG. INC. AND IS LOANED SUBJECT TO THE CONDITION THAT IT SHALL NOT BE REPRODUCED, COPIED, LOANED OR OTHERWISE DISPOSED OF, DIRECTLY OR INDIRECTLY. IT SHALL BE USED AS A MEANS OF REFERENCE TO WORK FURNISHED BY THIS COMPANY ONLY AND IS NOT TO BE SUBMITTED TO OUTSIDE PARTIES FOR EXAMINATION WITHOUT OUR CONSENT.

COPYRIGHT ©2000-2017 by Hayes Manufacturing, Inc. All rights reserved.