REV	DATE	CHANGE DESCRIPTION	MOD.BY	CK1	CK2
G	06/21/2005	CHANGED GREASE PLUG #	ZS	RJH	HM

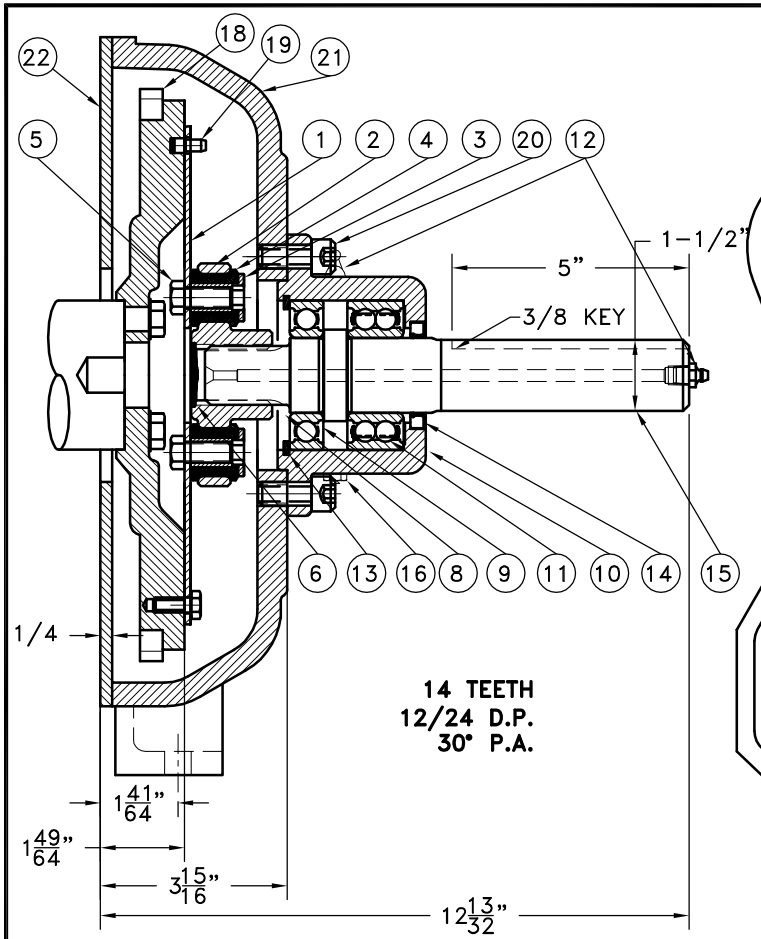

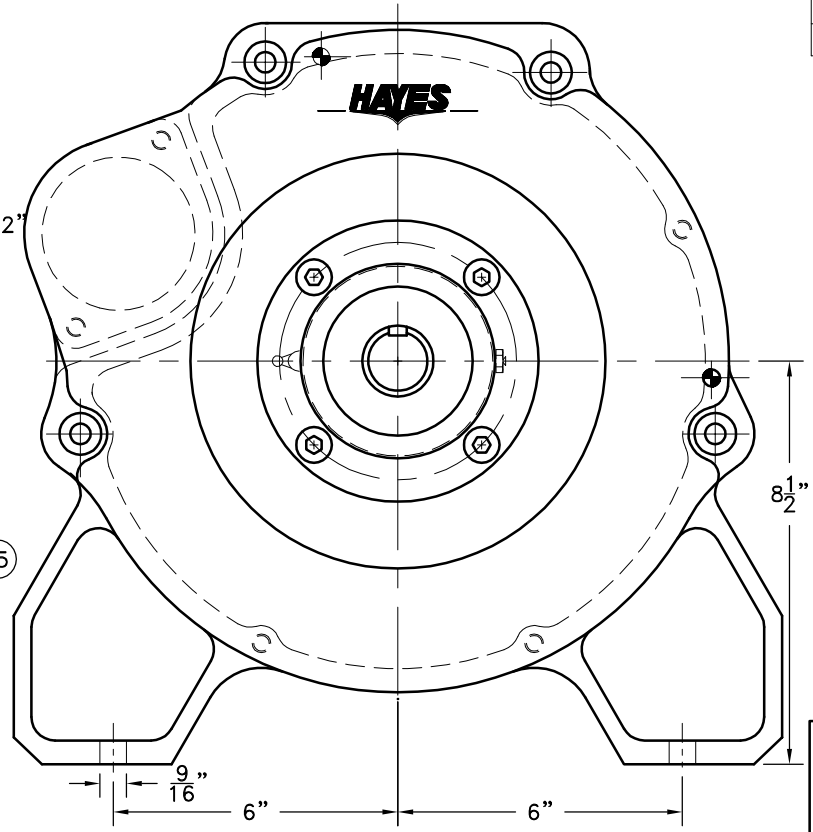

ASSEMBLY NOTE:

ENSURE THAT THE GREASE ZERT AND RELIEF VALVE ARE LOCATED HORIZONTAL WHEN MOUNTING ON TO PUMP MOUNT PLATE.

REPLACES: 935015

23	935012	BOLT KIT	1
22	935000	BACKING PLATE	1
21	935501-01	HOUSING	1
20	740000	1/2-13-1-1/8 SHCS	4
19	PURCHASE	1/4"x5/8" DOWEL PINS	3
18	12312-19G00	120 TOOTH RING GEAR	1
17	935001	FLYWHEEL	1
16	1093K11	RELIEF VALVE	1
15	125710	SPLINED SHAFT	1
14	CRW1-R-15830	SEAL	1
13	RR-314	SPIROLOX SNAP RING	1
12	600000	GREASE ZERT	2
11	5208WD	DOUBLE BEARING	1
10	125007	BEARING HOUSING	1
9	208P	BEARING	1
8	VS-032	V-RING	1
7	801912	GREASE	1
6	R-0017-01	GREASE PLUG	1
5	HX200	7/16-20-1 BOLT	6
4	H62500	NEOPRENE INSERT	6
3	123727	THREADED BUSHING	6
2	125749	COUPLING HUB	1
1	124203	FLYWHEEL PLATE	1

#935004 FLYWHEEL ASS'Y

BEARING SUPPORTED STUB SHAFT SUB-ASS'Y #125711

COUPLING ASS'Y 125748

NOTES:

1. LIGHTLY GREASE INTERNAL AND EXTERNAL AREA OF SPLINE AT ASSEMBLY USING COUPLING GREASE (OVER GREASING COULD CAUSE A HYDRAULIC TYPE LIFT ON SEALS). GREASE BEARING HOUSING UNTIL PIN EXTENDS FROM PRESSURE RELIEF VALVE (LOCATED 180° FROM GREASE ZERT).
2. USE OF AN UNLEADED EXTREME PRESSURE LITHIUM GREASE, WITH NLGI NO.2 GRADE IS RECOMMENDED. RUN TIME BETWEEN GREASINGS NOT TO EXCEED 2,000 HOURS.
3. WARNING!!! INJURY OR DEATH FROM A ROTATING STUB SHAFT CAN OCCUR IF A CONDITION EXISTS WHICH WOULD CAUSE THE SHAFT TO BREAK OR COME APART FROM ANY PART OF THE ASSEMBLY. DEPENDING UPON THE APPLICATION (FOR EXAMPLE, FAN, PULLEY, SHEAVE, ETC.), THE AREA AROUND THE STUB SHAFT MUST BE SUFFICIENTLY GUARDED SO THAT IN THE EVENT OF FAILURE, THE GUARD WILL CONTAIN ANY AIRBORNE PARTS.

THIS DRAWING IS THE PROPERTY OF HAYES MFG. INC. AND IS LOANED SUBJECT TO THE CONDITION THAT IT SHALL NOT BE REPRODUCED, COPIED, LOANED OR OTHERWISE DISPOSED OF, DIRECTLY OR INDIRECTLY. IT SHALL BE USED AS A MEANS OF REFERENCE TO WORK FURNISHED BY THIS COMPANY ONLY AND IS NOT TO BE SUBMITTED TO OUTSIDE PARTIES FOR EXAMINATION WITHOUT OUR CONSENT.

NISSAN H15, H20, & H25 ENGINES 1.5, 2.0, & 2.5 LITRE

SYMBOLS: FLATNESS, STRAIGHTNESS, ANGULARITY, PERPENDICULARITY, PARALLELISM, CONCENTRICITY, TRUE POSITION, ROUNDNESS, CIRCULAR RUN OUT, TOTAL RUN OUT, CYLINDRICITY, FINISH

DET. | PART NUMBER | DESCRIPTION | QTY.

DO NOT SCALE DRAWING

TOLERANCES UNLESS OTHERWISE SPECIFIED
125 MAXIMUM
ANGLE ±1/2°
FRACTION ±1/32
DECIMAL
.00 ±.01
.000 ±.005
.0000 ±.0005

HAYES MANUFACTURING INC. ®

TITLE: NISSAN H-SERIES BEARING STUB SHAFT ASS'Y

MATERIAL

CLASS | MAKE: ☐ BUY: ☐ | DRAWN BY: HAVEMAN | DATE: 8-10-00 | DRAWING NO. 935017

DESCRIPTION | CHECKED BY | SCALE | SHEET OF REV.

COPYRIGHT ©2000-2014 by Hayes Manufacturing, Inc. All rights reserved.

4/16/2014 10:00:13 AM