SYM.	DATE	CHANGE DESCRIPTION	DWN.

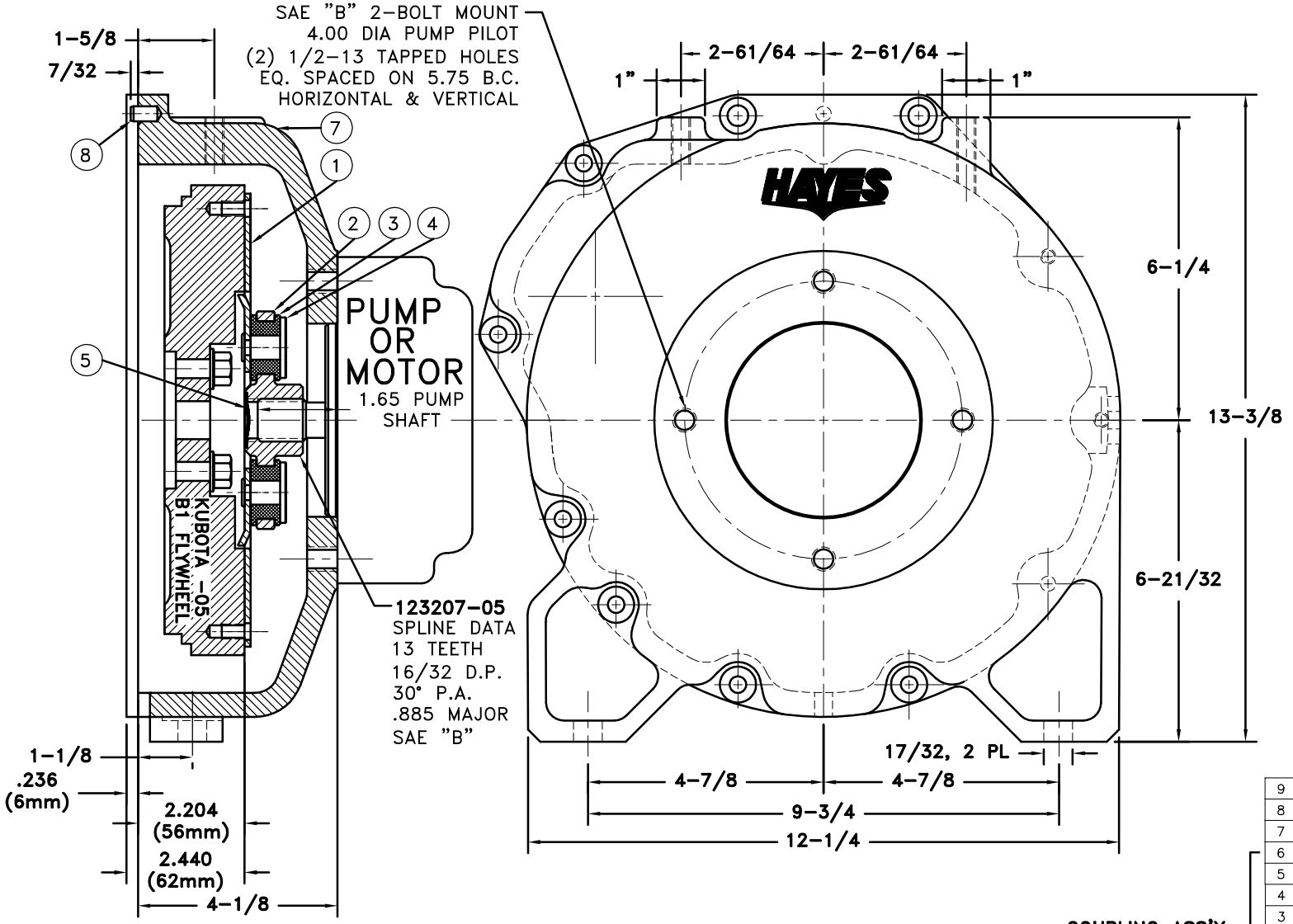

UP TO 50 HP

9	952111	BOLT KIT	1
8	PURCHASE	5/16 DIA x 1/2 DOWEL PIN	2
7	952088-03	HOUSING	1
6	801912	GREASE	1
5	HP-1125-S-32	HUBBARD PLUG	1
4	123206-01	STEEL RIVET	6
3	H52500	NEOPRENE INSERT	6
2	123207-05	COUPLING HUB	1
1	124118-02	FLYWHEEL PLATE	1

COUPLING ASS'Y #124957

NOTES:

1. HOUSING FOR KUBOTA ENGINES D-905, D1005-B, D1105-B, V1205-B, V1305-P, AND V1505-B

2. USE FURNISHED TEXACO 1912 COUPLING GREASE ON BOTH MALE AND FEMALE SPLINE.

SYMBOLS
FLATNESS
STRAIGHTNESS
ANGULARITY
SQUARENESS
PARALLELISM
CONCENTRICITY
TRUE POSITION
ROUNDNESS
CIRCULAR RUN OUT
TOTAL RUN OUT
CYLINDRICITY
FINISH

DET.	PART NUMBER	DESCRIPTION	QTY.

DO NOT SCALE DRAWING
TOLERANCES UNLESS OTHERWISE SPECIFIED
125 MAXIMUM
ANGLE ±1/2°
FRACTION ±1/32
DECIMAL
.00 ±.01
.000 ±.005
.0000 ±.0005

HAYES MANUFACTURING INC. ®

TITLE
KUBOTA -05 SERIES HOUSING & COUPLING ASS'Y

MATERIAL

– UNLESS OTHERWISE SPECIFIED –
REMOVE FIRST THREAD ON ALL TAPPED HOLES
BREAK ALL SHARP CORNERS .010 TO .020
STAMP OR MARK DRAWING NO.

DRAWN BY	DATE	DRAWING NO.
HAVEMAN	3-21-00	952119
CHECKED BY	SCALE	SHEET OF REV.

THIS DRAWING IS THE PROPERTY OF HAYES MFG. INC. AND IS LOANED SUBJECT TO THE CONDITION THAT IT SHALL NOT BE REPRODUCED, COPIED, LOANED OR OTHERWISE DISPOSED OF, DIRECTLY OR INDIRECTLY. IT SHALL BE USED AS A MEANS OF REFERENCE TO WORK FURNISHED BY THIS COMPANY ONLY AND IS NOT TO BE SUBMITTED TO OUTSIDE PARTIES FOR EXAMINATION WITHOUT OUR CONSENT.

COPYRIGHT ©2000-2006 by Hayes Manufacturing, Inc.

08/07/2006 04:26:31 PM