REV	DATE	CHANGE DESCRIPTION	MOD.BY	CK1	CK2

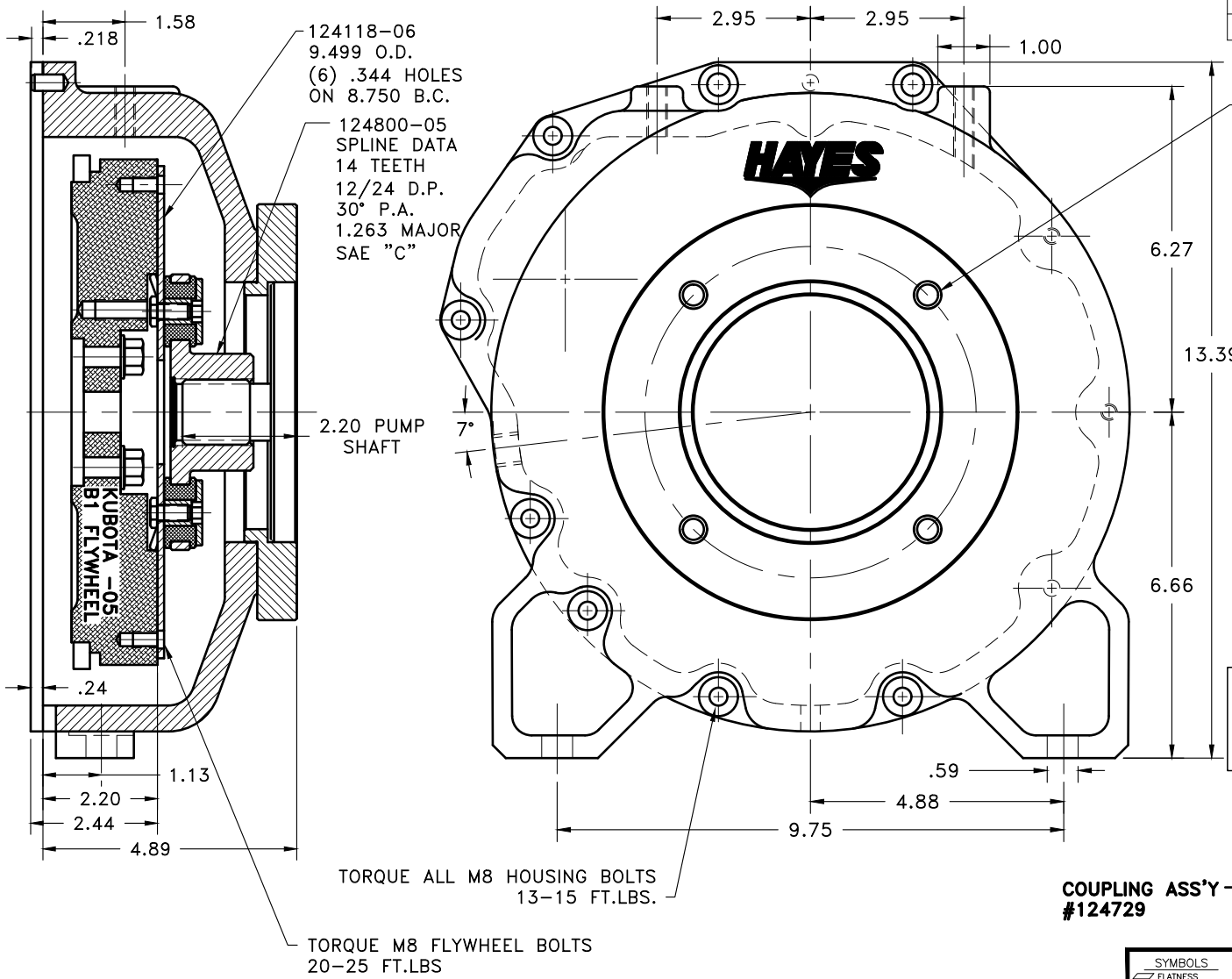

NOTES:

1. HOUSING FOR KUBOTA ENGINES D-905, D1005-B, D1105-B, V1205-B, V1305-P, AND V1505-B

2. USE FURNISHED COUPLING GREASE ON BOTH MALE AND FEMALE SPLINE.

INSTALL

UP TO 65 HP

11	125253-02	ADAPTER PLATE	1
10	952111	BOLT KIT (PRE-ASSEMBLED)	1
9	DOWEL	SD200x5/16x1/2 DOWEL PIN	2
8	952088-11	HOUSING	1
7	801912	GREASE	1
6	HP-1312-S-62	HUBBARD PLUG	1
5	HX300	SPEC. 5/16-24x5/8 HHB Y D	8
4	123729-01	THREADED BUSHING	8
3	H52500	NEOPRENE INSERT	8
2	124800-05	COUPLING HUB	1
1	124118-06	FLYWHEEL PLATE	1

COUPLING ASS'Y #124729

SYMBOLS
FLATNESS
STRAIGHTNESS
ANGULARITY
PERPENDICULARITY
PARALLELISM
CONCENTRICITY
TRUE POSITION
ROUNDNESS
CIRCULAR RUN OUT
TOTAL RUN OUT
CYLINDRICITY
FINISH

DET.	PART NUMBER	DESCRIPTION	QTY.

DO NOT SCALE DRAWING
TOLERANCES UNLESS OTHERWISE SPECIFIED
125 MAXIMUM
ANGLE ±1/2°
FRACTION ±1/32
DECIMAL
.00 ±.01
.000 ±.005
.0000 ±.0005

HAYES MANUFACTURING INC. ®

TITLE
KUBOTA -05 HOUSING & COUPLING ASS'Y

MATERIAL

CLASS
MAKE: BUY:
DESCRIPTION

DRAWN BY SIETING
DATE 10-19-2009
CHECKED BY RJH
SCALE
DRAWING NO. 952198
SHEET OF REV.

THIS DRAWING IS THE PROPERTY OF HAYES MFG. INC. AND IS LOANED SUBJECT TO THE CONDITION THAT IT SHALL NOT BE REPRODUCED, COPIED, LOANED OR OTHERWISE DISPOSED OF, DIRECTLY OR INDIRECTLY. IT SHALL BE USED AS A MEANS OF REFERENCE TO WORK FURNISHED BY THIS COMPANY ONLY AND IS NOT TO BE SUBMITTED TO OUTSIDE PARTIES FOR EXAMINATION WITHOUT OUR CONSENT.

COPYRIGHT ©2000-2017 by Hayes Manufacturing, Inc. All rights reserved.