REV	DATE	CHANGE DESCRIPTION	MOD.BY	CK1	CK2
D	05/02/2006	CHANGED TO BOLTED INSERTS.	ZS		

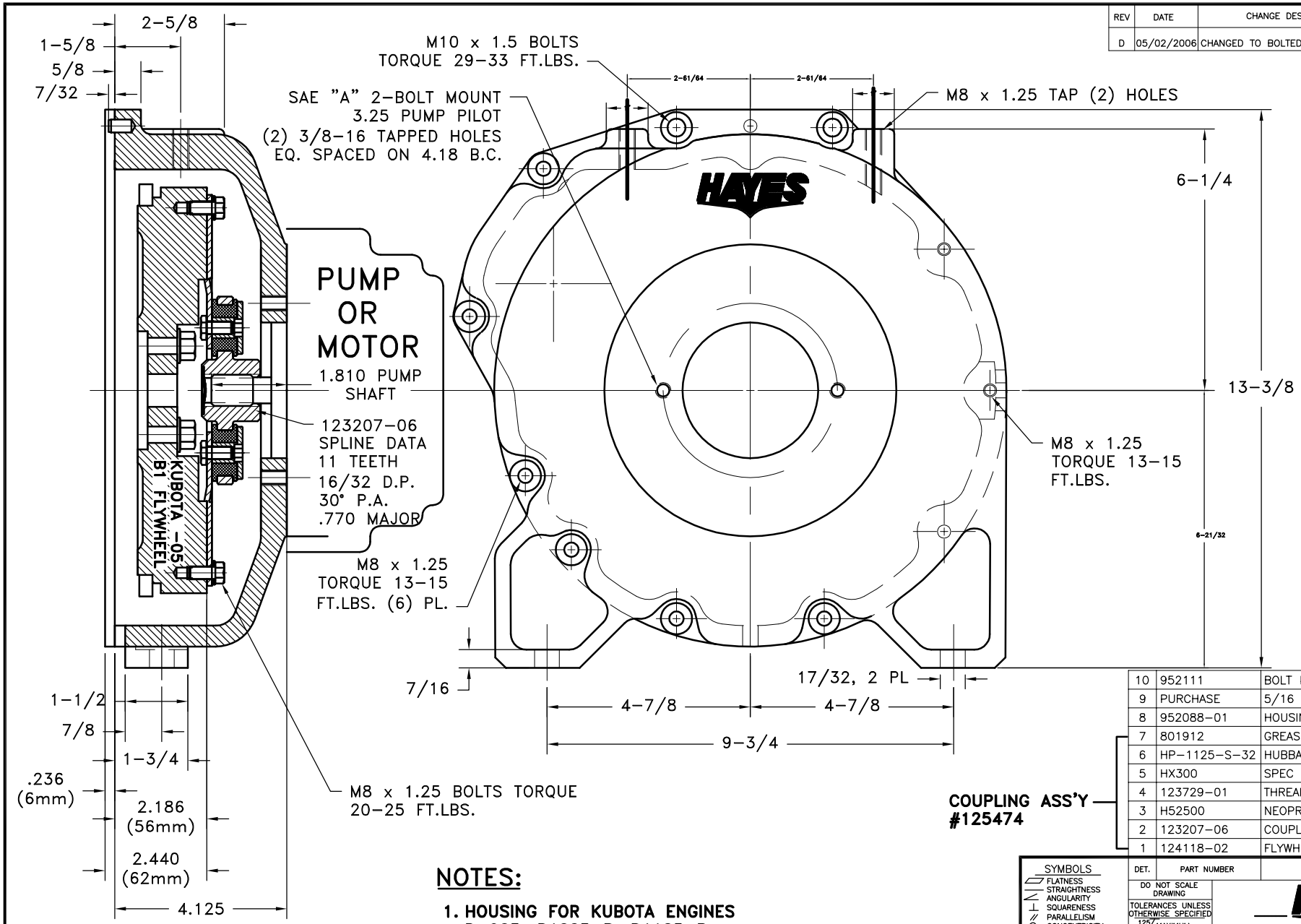

UP TO 50 HP

DET.	PART NUMBER	DESCRIPTION	QTY.
10	952111	BOLT KIT	1
9	PURCHASE	5/16 DIA x 1/2 DOWEL PIN	2
8	952088-01	HOUSING	1
7	801912	GREASE	1
6	HP-1125-S-32	HUBBARD PLUG	1
5	HX300	SPEC 5/16-24 x 5/8" HHB	6
4	123729-01	THREADED BUSHING	6
3	H52500	NEOPRENE INSERT	6
2	123207-06	COUPLING HUB	1
1	124118-02	FLYWHEEL PLATE	1

COUPLING ASS'Y #125474

NOTES:

1. **HOUSING FOR KUBOTA ENGINES D-905, D1005-B, D1105-B, V1205-B, V1305-B AND V1505-B**
2. **USE FURNISHED TEXACO 1912 COUPLING GREASE ON BOTH MALE AND FEMALE SPLINE.**

SYMBOLS
FLATNESS
STRAIGHTNESS
ANGULARITY
SQUARENESS
PARALLELISM
CONCENTRICITY
TRUE POSITION
ROUNDNESS
CIRCULAR RUN OUT
TOTAL RUN OUT
CYLINDRICITY
FINISH

DO NOT SCALE DRAWING
TOLERANCES UNLESS OTHERWISE SPECIFIED
125 MAXIMUM
ANGLE ±1/2°
FRACTION ±1/32
DECIMAL
.00 ±.01
.000 ±.005
.0000 ±.0005

– UNLESS OTHERWISE SPECIFIED –
REMOVE FIRST THREAD ON ALL TAPPED HOLES
BREAK ALL SHARP CORNERS .010 TO .020
STAMP OR MARK DRAWING NO.

HAYES MANUFACTURING INC. ®

TITLE
KUBOTA -05 SERIES FLYWHEEL COUPLING ASS'Y

MATERIAL

DRAWN BY	DATE	DRAWING NO.
HAVEMAN	6-28-99	952227
CHECKED BY	SCALE	SHEET OF REV.
RJH		

THIS DRAWING IS THE PROPERTY OF HAYES MFG. INC. AND IS LOANED SUBJECT TO THE CONDITION THAT IT SHALL NOT BE REPRODUCED, COPIED, LOANED OR OTHERWISE DISPOSED OF, DIRECTLY OR INDIRECTLY. IT SHALL BE USED AS A MEANS OF REFERENCE TO WORK FURNISHED BY THIS COMPANY ONLY AND IS NOT TO BE SUBMITTED TO OUTSIDE PARTIES FOR EXAMINATION WITHOUT OUR CONSENT.

COPYRIGHT ©2000-2006 by Hayes Manufacturing, Inc.

08/07/2006 04:20:52 PM