REV	DATE	CHANGE DESCRIPTION	MOD.BY	CK1	CK2
A	03/19/2002	CHANGED HOUSING TO 978003-07	ZS	MH	ML

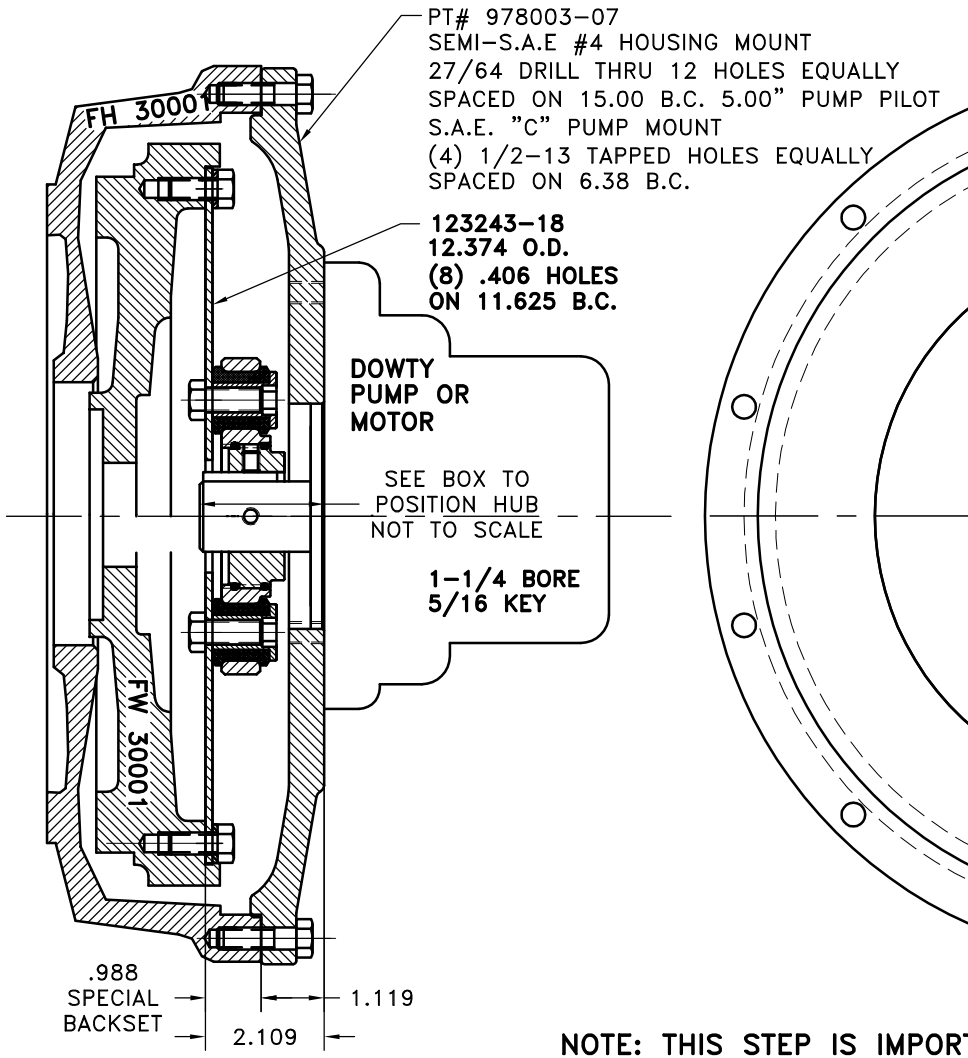

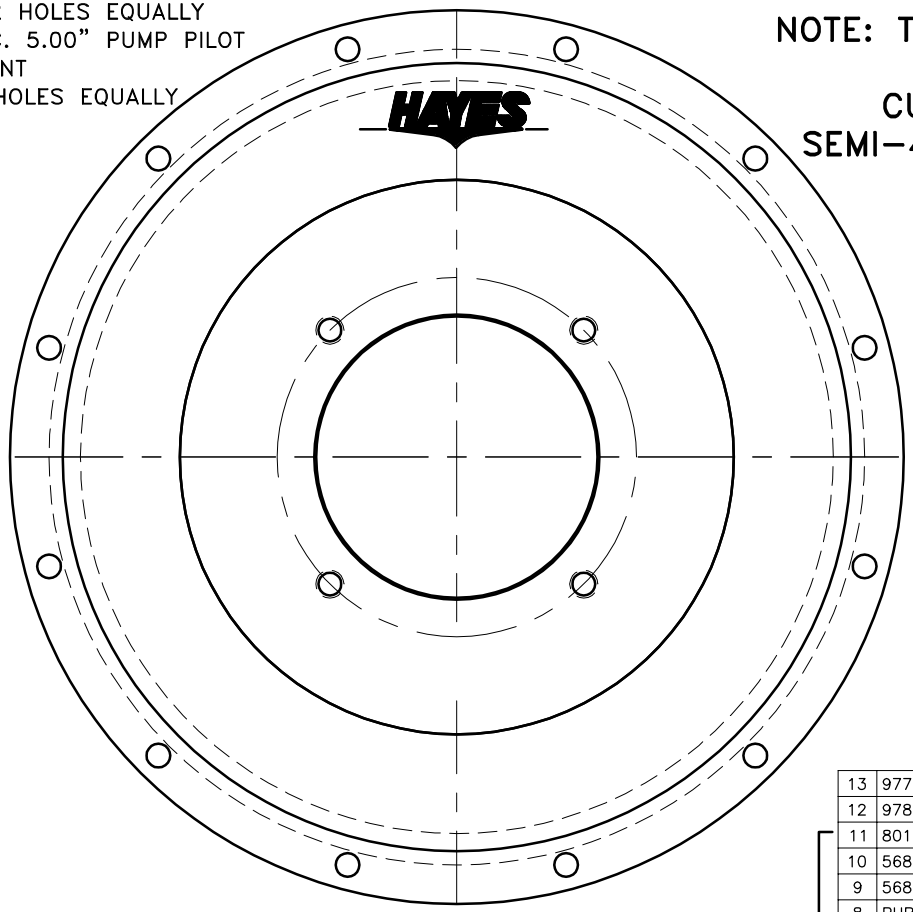

NOTE: TORQUE ALL M10 BOLTS
29-33 FT.LBS.
CUMMINS 3.3 LITRE
SEMI-4 HOUSING & SAE 10
FLYWHEEL

NOTE: REMOVE HUB FROM ASS'Y, PRESET HUB ON SHAFT & REASSEMBLE USING NUT & BOLT GRADE LOC-TITE ON SET SCREWS. SHAFT SHOULD HAVE A MINIMUM OF 3/4" OF ENGAGEMENT IF NOT CONTACT FACTORY FOR RECOMMENDATIONS. TO GET HUB PRESET USE THIS EQUATION:

EXAMPLE:
1.69 - SHAFT LENGTH = HUB PRESET

IF YOUR ANSWER IS (+) SHAFT IS INSIDE OF HUB, IF YOUR ANSWER IS (-) SHAFT STICKS OUT OF HUB. (SEE BOXES)

NOTE: THIS STEP IS IMPORTANT TO ENSURE FULL SPLINE ENGAGEMENT.

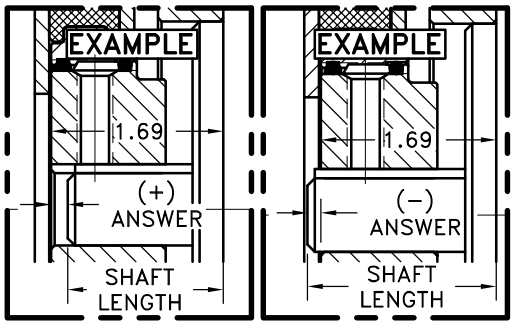

COUPLING ASS'Y #125633

DET.	PART NUMBER	DESCRIPTION	QTY.
13	977535	BOLT KIT	1
12	978003-07	HOUSING	1
11	801912	GREASE	1
10	568-143	O-RING (124473)	1
9	568-142	O-RING (124838-43)	1
8	PURCHASE	5/16-18x1/2 SSSCP	1
7	PURCHASE	5/16-18x3/8 SSSCP	1
6	HX200	7/16-20x1 HHB	6
5	123727	THREADED BUSHING	6
4	H62500	NEOPRENE INSERT	6
3	124838-43	EXTERNAL SPLINED ADAPTER	1
2	124473	INTERNAL SPLINED HUB	1
1	123243-18	FLYWHEEL PLATE	1

SYMBOLS
FLATNESS
STRAIGHTNESS
ANGULARITY
SQUARENESS
PARALLELISM
CONCENTRICITY
TRUE POSITION
ROUNDNESS
CIRCULAR RUN OUT
TOTAL RUN OUT
CYLINDRICITY
FINISH

DO NOT SCALE DRAWING

TOLERANCES UNLESS OTHERWISE SPECIFIED
ANGLE ±1/2°
FRACTION ±1/32
DECIMAL
.00 ±.01
.000 ±.005
.0000 ±.0005

HAYES TM MANUFACTURING INC.

TITLE
CUMMINS 3.3 LITRE HOUSING & FLYWHEEL COUPLING ASS'Y

MATERIAL

- UNLESS OTHERWISE SPECIFIED -
REMOVE FIRST THREAD ON ALL TAPPED HOLES
BREAK ALL SHARP CORNERS .010 TO .020
STAMP OR MARK DRAWING NO.

DRAWN BY	DATE	DRAWING NO.
SIETING	7-09-01	977596
CHECKED BY	SCALE	SHEET OF REV.
RJH		

THIS DRAWING IS THE PROPERTY OF HAYES MFG. INC. AND IS LOANED SUBJECT TO THE CONDITION THAT IT SHALL NOT BE REPRODUCED, COPIED, LOANED OR OTHERWISE DISPOSED OF, DIRECTLY OR INDIRECTLY. IT SHALL BE USED AS A MEANS OF REFERENCE TO WORK FURNISHED BY THIS COMPANY ONLY AND IS NOT TO BE SUBMITTED TO OUTSIDE PARTIES FOR EXAMINATION WITHOUT OUR CONSENT.

COPYRIGHT ©2000 by Hayes Manufacturing, Inc.

08/08/2006 02:59:49 PM