REV	DATE	CHANGE DESCRIPTION	MOD.BY	CK1	CK2

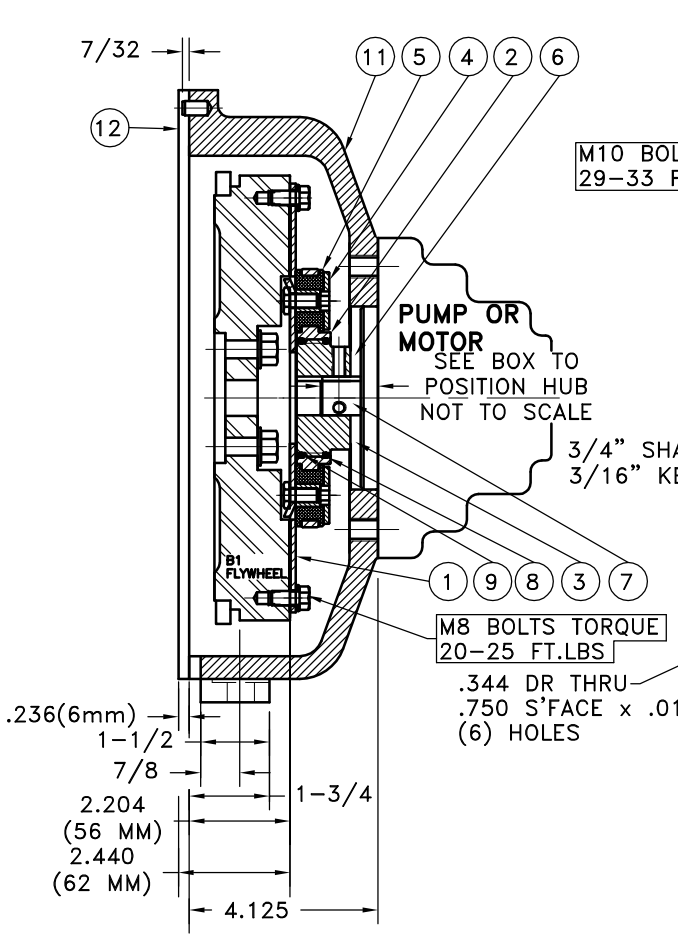

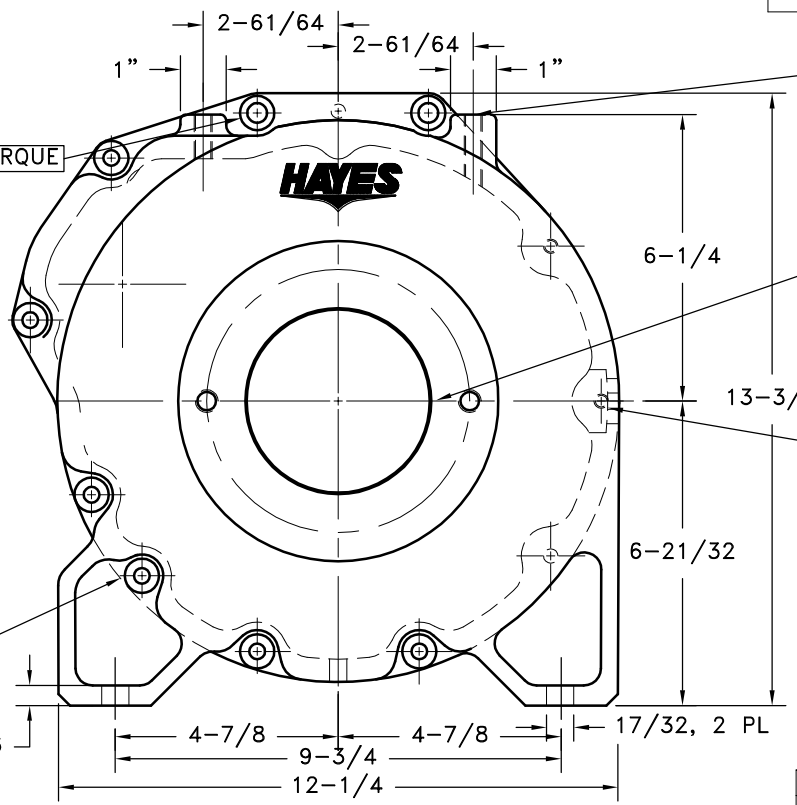

NOTE:

1. HOUSING FOR KUBOTA ENGINES D-905, D1005-B, D1105-B, V1205-B, V1305-B AND V1505-B
2. USE FURNISHED COUPLING GREASE ON BOTH MALE/FEMALE SPLINE.

UP TO 50 H.P.

14	952111	BOLT KIT	1
13	PURCHASE	5/16 DIA x 1/2 DOWEL PIN	2
12	952088-02	HOUSING	1
11	801912	GREASE	1
10	568-143	O-RING (124282-02)	1
9	568-142	O-RING (124284-07)	1
8	PURCHASE	5/16-18x5/8 SSSCP	1
7	PURCHASE	5/16-18x3/4 SSSCP	1
6	HX300	SPEC. 5/16-24 x 5/8" HHB	6
5	123729-01	THREADED BUSHING	6
4	H52500	NEOPRENE INSERT	6
3	124284-07	EXTERNAL SPLINED ADAPTER	1
2	124282-02	INTERNAL SPLINED HUB	1
1	124118-08	FLYWHEEL PLATE	1

COUPLING ASS'Y #124285

NOTE: REMOVE HUB FROM ASS'Y, PRESET HUB ON SHAFT & REASSEMBLE USING NUT & BOLT GRADE LOC-TITE ON SET SCREWS. SHAFT SHOULD HAVE A MINIMUM OF 3/4" OF ENGAGEMENT IF NOT CONTACT FACTORY FOR RECOMMENDATIONS. TO GET HUB PRESET USE THIS EQUATION:

EXAMPLE:
1.78 – SHAFT LENGTH = HUB PRESET

IF YOUR ANSWER IS (+) SHAFT IS INSIDE OF HUB, IF YOUR ANSWER IS (–) SHAFT STICKS OUT OF HUB. (SEE BOXES)

NOTE: THIS STEP IS IMPORTANT TO ENSURE FULL SPLINE ENGAGEMENT.

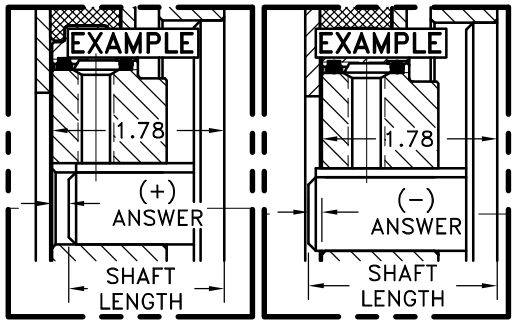

THIS DRAWING IS THE PROPERTY OF HAYES MFG. INC. AND IS LOANED SUBJECT TO THE CONDITION THAT IT SHALL NOT BE REPRODUCED, COPIED, LOANED OR OTHERWISE DISPOSED OF, DIRECTLY OR INDIRECTLY. IT SHALL BE USED AS A MEANS OF REFERENCE TO WORK FURNISHED BY THIS COMPANY ONLY AND IS NOT TO BE SUBMITTED TO OUTSIDE PARTIES FOR EXAMINATION WITHOUT OUR CONSENT.

SYMBOLS: FLATNESS, STRAIGHTNESS, ANGULARITY, SQUARENESS, PARALLELISM, CONCENTRICITY, TRUE POSITION, ROUNDNESS, CIRCULAR RUN OUT, TOTAL RUN OUT, CYLINDRICITY, FINISH

DET.	PART NUMBER	DESCRIPTION	QTY.

DO NOT SCALE DRAWING
TOLERANCES UNLESS OTHERWISE SPECIFIED
125 MAXIMUM
ANGLE ±1/2°
FRACTION ±1/32
DECIMAL
.00 ±.01
.000 ±.005
.0000 ±.0005

– UNLESS OTHERWISE SPECIFIED –
REMOVE FIRST THREAD ON ALL TAPPED HOLES
BREAK ALL SHARP CORNERS .010 TO .020
STAMP OR MARK DRAWING NO.

HAYES MANUFACTURING INC. ®

TITLE: KUBOTA -05 SERIES HOUSING ASS'Y

MATERIAL

DRAWN BY	DATE	DRAWING NO.
SIETING	08-04-04	990117
CHECKED BY	SCALE	SHEET OF REV.
RJH		

COPYRIGHT ©2000-2006 by Hayes Manufacturing, Inc.

08/08/2006 09:18:17 AM