REV	DATE	CHANGE DESCRIPTION	MOD.BY	CK1	CK2
B	01/17/2002	CHANGED DOWEL/ HOUSING ASS'Y	ZS		

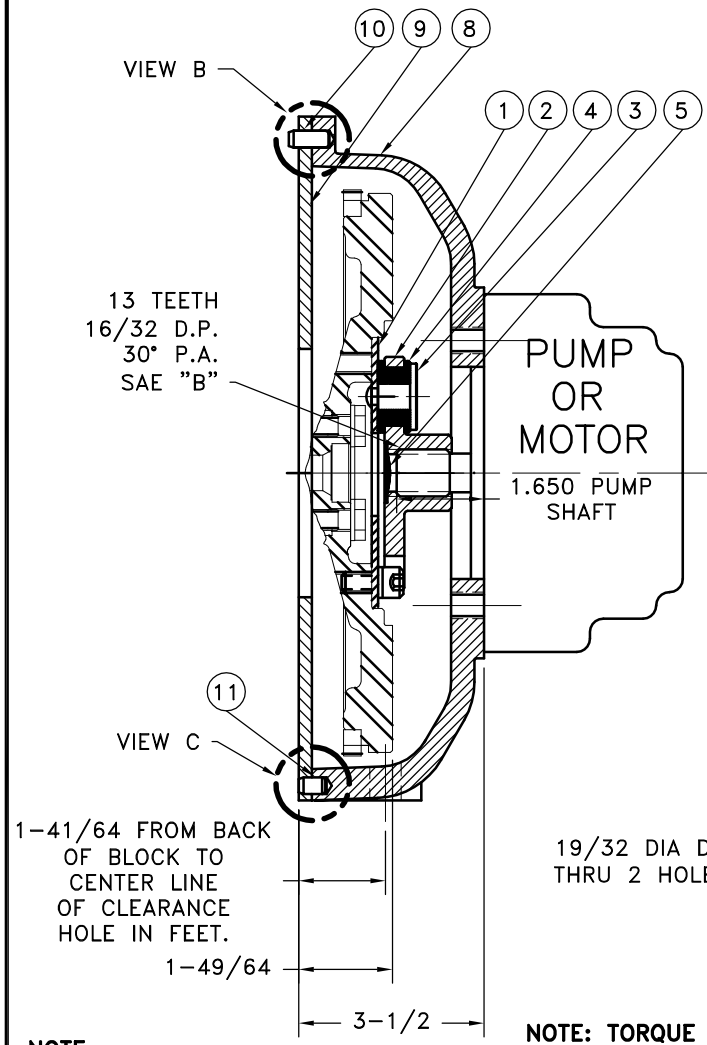

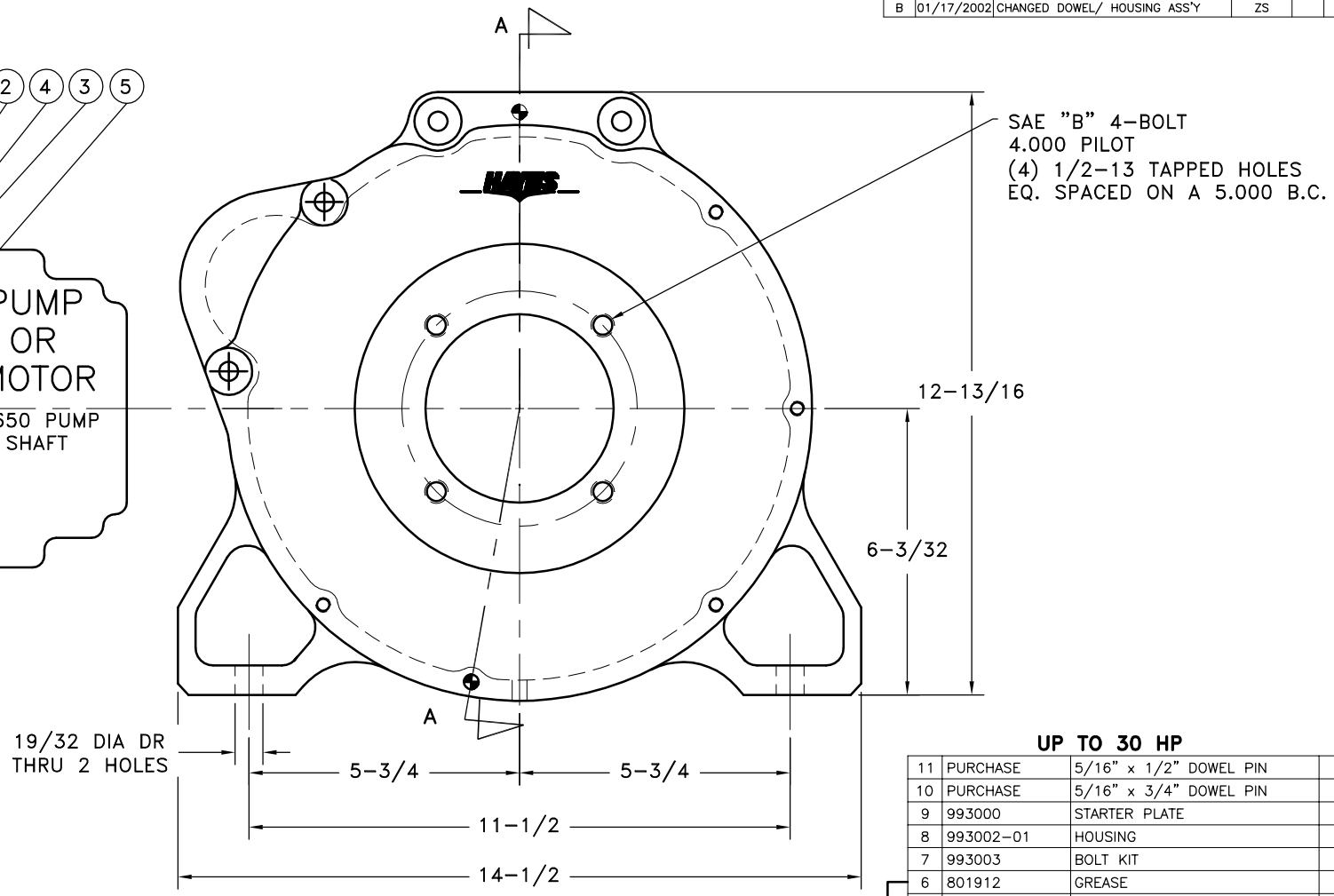

NOTE: TORQUE ALL M10 BOLTS 29-33 FT.LBS
TORQUE ALL M8 BOLTS 20-25 FT.LBS
TORQUE ALL 5/16 BOLTS 25-30 FT.LBS

NOTE:
1. **HOUSING WILL FIT MITSUBISHI ENGINES L2E & L3E**
2. **USE FURNISHED TEXACO 1912 COUPLING GREASE ON BOTH INTERNAL AND EXTERNAL SPLINES**
3. **CAUTION! WHEN INSTALLING PUMP ON ENGINE HOUSING BE CAREFUL BOLTS DO NOT EXTEND PAST INSIDE FACE OF HOUSING AND RUB ON COUPLING ASSEMBLY.**

THIS DRAWING IS THE PROPERTY OF HAYES MFG. INC. AND IS LOANED SUBJECT TO THE CONDITION THAT IT SHALL NOT BE REPRODUCED, COPIED, LOANED OR OTHERWISE DISPOSED OF, DIRECTLY OR INDIRECTLY. IT SHALL BE USED AS A MEANS OF REFERENCE TO WORK FURNISHED BY THIS COMPANY ONLY AND IS NOT TO BE SUBMITTED TO OUTSIDE PARTIES FOR EXAMINATION WITHOUT OUR CONSENT.

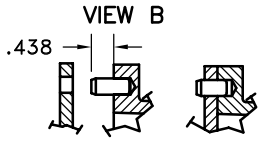

PRESS FIT DOWEL IN HAYES HOUSING AT HAYES, AS SHOWN IN VIEW B

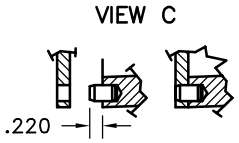

PRESS FIT DOWEL IN HAYES HOUSING AT HAYES, AS SHOWN IN VIEW C

UP TO 30 HP

11	PURCHASE	5/16" x 1/2" DOWEL PIN	1
10	PURCHASE	5/16" x 3/4" DOWEL PIN	1
9	993000	STARTER PLATE	1
8	993002-01	HOUSING	1
7	993003	BOLT KIT	1
6	801912	GREASE	1
5	HP-1125-S-32	HUBBARD PLUG	1
4	H52500	NEOPRENE INSERT	4
3	123206-01	STEEL RIVET	4
2	125520-02	COUPLING HUB	1
1	125523	FLYWHEEL PLATE	1

COUPLING ASS'Y #125522

SYMBOLS: FLATNESS, STRAIGHTNESS, ANGULARITY, SQUARENESS, PARALLELISM, CONCENTRICITY, TRUE POSITION, ROUNDNESS, CIRCULAR RUN OUT, TOTAL RUN OUT, CYLINDRICITY, FINISH

DET. | PART NUMBER | DESCRIPTION | QTY.

DO NOT SCALE DRAWING

TOLERANCES UNLESS OTHERWISE SPECIFIED
125 MAXIMUM
ANGLE ±1/2°
FRACTION ±1/32
DECIMAL
.00 ±.01
.000 ±.005
.0000 ±.0005

HAYES MANUFACTURING INC. ®

TITLE: FLYWHEEL COUPLING ASS'Y

MATERIAL

– UNLESS OTHERWISE SPECIFIED –
REMOVE FIRST THREAD ON ALL TAPPED HOLES
BREAK ALL SHARP CORNERS .010 TO .020
STAMP OR MARK DRAWING NO.

DRAWN BY	DATE	DRAWING NO.
HAVEMAN	6-03-98	993008
CHECKED BY	SCALE	SHEET OF REV.
RJH		

COPYRIGHT ©2000-2006 by Hayes Manufacturing, Inc.

11/9/2006 2:08:49 PM