REV	DATE	CHANGE DESCRIPTION	MOD.BY	CK1	CK2

HAYES HEX~FLX ASSEMBLY NOTE:

METAL HUB SHOULD BE FULLY ENGAGED INTO NYLON DRIVE PLATE.

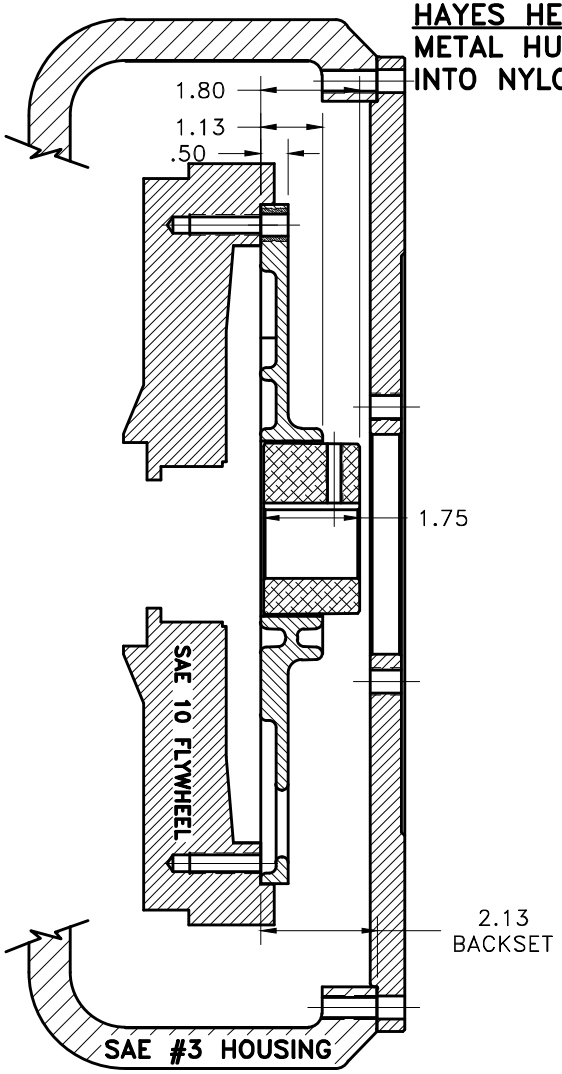

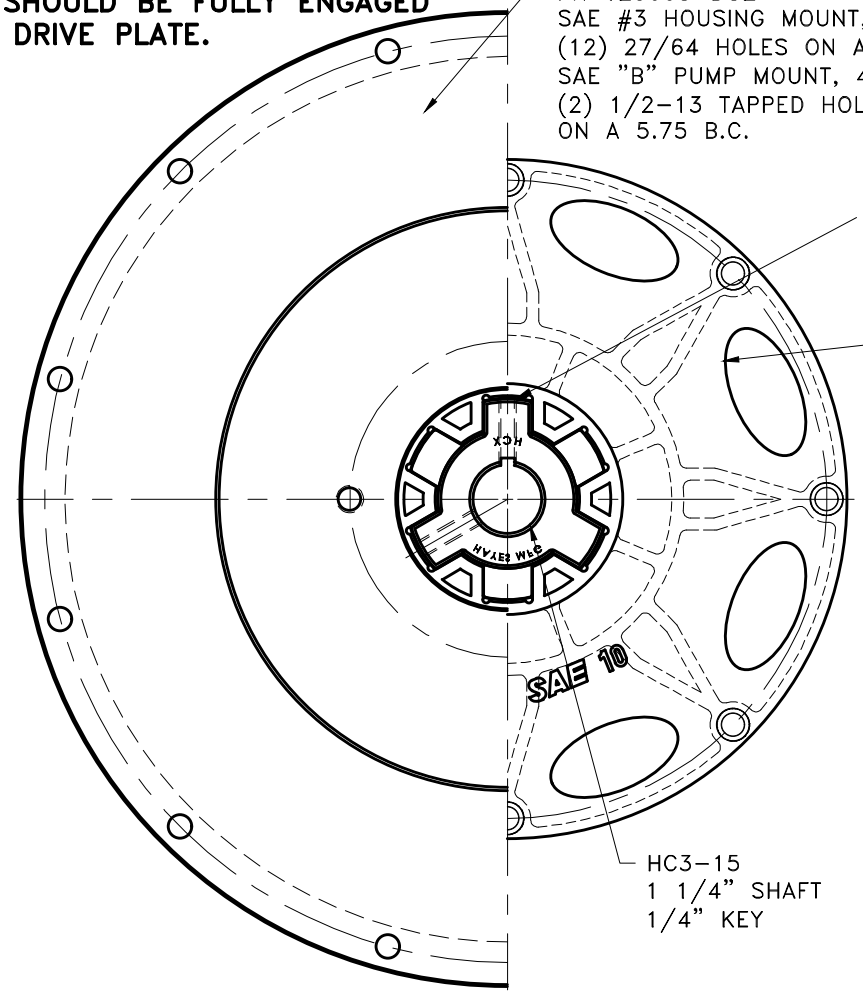

PN 123008-D02
SAE #3 HOUSING MOUNT, 16.13 PILOT
(12) 27/64 HOLES ON A 16.88 B.C.
SAE "B" PUMP MOUNT, 4.00 PILOT
(2) 1/2-13 TAPPED HOLES
ON A 5.75 B.C.

(2) 3/8" SET SCREWS TORQUE BOTH TO 25 FT. LBS USING TORQUE WRENCH AT FINAL INSTALLATION

C-010
S.A.E. 10 FIBERGLASS REINFORCED
NYLON DRIVE PLATE
(8) .416 HOLES EQ.
SPACED ON A 11.625 B.C.
"C" SERIES DRIVE

HC3-15
1 1/4" SHAFT
1/4" KEY

IMPORTANT INSTALLATION NOTE!!!!!

IMPROPER INSTALLATION OF HUB COULD CAUSE PREMATURE WEAR AND OR FAILURE.

IF YOU HAVE QUESTIONS CONCERNING LOCATION OF METAL HUB ON PUMP SHAFT PLEASE CONTACT DISTRIBUTOR OR FACTORY FOR FURTHER INFORMATION

BOTH HUB SET SCREWS MUST BE PROPERLY TORQUED TO 25 FT.LBS. USING TORQUE WRENCH.
PLEASE CONTACT DISTRIBUTOR OR FACTORY FOR ANY FURTHER QUESTIONS.

NOTE: REMOVE HUB FROM ASS'Y, PRESET HUB ON SHAFT AS SHOWN. TORQUE BOTH SET SCREWS TO 25 FT.LBS. USING TORQUE WRENCH. SHAFT SHOULD HAVE A MINIMUM OF 3/4" OF ENGAGEMENT IF NOT CONTACT FACTORY FOR RECOMMENDATIONS (231) 879-3372 TO GET HUB PRESET USE THIS EQUATION:

PERFORM CALCULATION BELOW:

2.51 - SHAFT LENGTH = HUB PRESET

IF YOUR ANSWER IS (+) SHAFT IS INSIDE OF HUB, IF YOUR ANSWER IS (-) SHAFT STICKS OUT OF HUB. (SEE BOXES)

NOTE: THIS STEP IS IMPORTANT TO ENSURE FULL SHAFT ENGAGEMENT.

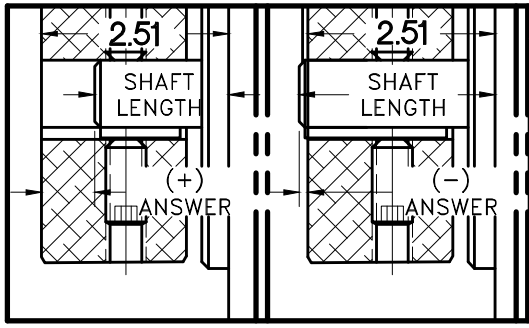

INSTALL HUB AS SHOWN

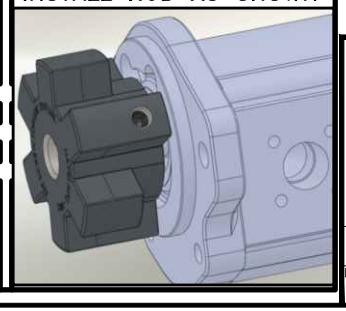

"C" SERIES TORQUE RANGE 65-175 HP

DET.	PART NUMBER	DESCRIPTION	QTY.
3	123008-D02	PUMP MOUNT PLTE	1
2	HC3-15	C SERIES HEX~FLX HUB	1
1	C-010	SAE 10 HEX~FLX DRIVE PLATE	1

SYMBOLS: FLATNESS, STRAIGHTNESS, ANGULARITY, PERPENDICULARITY, PARALLELISM, CONCENTRICITY, TRUE POSITION, ROUNDNESS, CIRCULAR RUN OUT, TOTAL RUN OUT, CYLINDRICITY, FINISH

DO NOT SCALE DRAWING
TOLERANCES UNLESS OTHERWISE SPECIFIED
125 MAXIMUM
ANGLE ±1/2°
FRACTION ±1/32
DECIMAL
.00 ±.01
.000 ±.005
.0000 ±.0005

HAYES MANUFACTURING INC. ®

TITLE: HEX~FLX "C" SERIES 2 PIECE COUPLING

MATERIAL

CLASS | MAKE: ☐ BUY: ☐

DESCRIPTION

DRAWN BY	DATE	DRAWING NO.
LAWSON	5-16-2016	C-010-HC3-15-DO2
CHECKED BY RJH	SCALE	SHEET OF REV.

THIS DRAWING IS THE PROPERTY OF HAYES MFG. INC. AND IS LOANED SUBJECT TO THE CONDITION THAT IT SHALL NOT BE REPRODUCED, COPIED, LOANED OR OTHERWISE DISPOSED OF, DIRECTLY OR INDIRECTLY. IT SHALL BE USED AS A MEANS OF REFERENCE TO WORK FURNISHED BY THIS COMPANY ONLY AND IS NOT TO BE SUBMITTED TO OUTSIDE PARTIES FOR EXAMINATION WITHOUT OUR CONSENT.

COPYRIGHT ©2000-2017 by Hayes Manufacturing, Inc. All rights reserved.